# CITY OF TROUTDALE
# CONSTRUCTION DETAILS
# INTERIM CHANGES

## TABLE OF CONTENTS


IC 1 – Sanitary Sewer Manhole Locations, Spacing, Inverts.....tab 1
IC 2 – Number of Water Service Meters per Property .....tab 2
IC 3 – RECINDED.....tab 3
IC 4 – Add New Drawing II-29 – Town Center Overlay Street .tab 4
IC 5 – RECINDED.....tab 5
IC 6 – Gravel Construction Entrance Rock.....tab 6
IC 7 – Superseded by IC #'s 26 and 27.....tab 7
IC 8 – Access Management for Driveways.....tab 8
IC 9 – Superseded by IC #10.....tab 9
IC 10 – Superseded by IC #19.....tab 10
IC 11 – Catch Basins Filter Bags, Biobags.....tab 11
IC 12 – Fire Hydrants.....tab 12
IC 13 – Certification of Buildable Lots.....tab 13
IC 14 – Meter Makes/Models Deleted.....tab 14
IC 15 – Storm Sewer Design .....tab 15
IC 16 – Storm Sewer Collection – Rainfall Intensities.....tab 16
IC 17 – Drawing II-1 Updated - C/I Street Cross Section.....tab 17
IC 18 – Drawing VIII-3 Replaced - Manhole Base .....tab 18
IC 19 – Superseded by IC #30.....tab 19
IC 20 – Fire Hydrant Drawings Replaced.....tab 20
IC 21 – Vertical Datum and As-Built Survey Requirements....tab 21
IC 22 – OHA-DWP Plan Review Exemption – Water Mains...tab 22
IC 23 – ODEQ Exemption – Gravity Sanitary Sewer .....tab 23
IC 24 – Sidewalk Ramp Drawings Replaced .....tab 24
IC 25 – Stormwater Quality Treatment (PSWMM).....tab 25
IC 26 – Acceptable Water Meters .....tab 26
IC 27 – Acceptable Water Meter Boxes.....tab 27
IC 28 – Clustered Mailboxes.....tab 28
IC 29 – Sidewalk Cutting/Grinding .....tab 29
IC 30 – Driveway Drawings Replaced, Driveway Locations ....tab 30
IC 31 – Drawing Replaced – 14' Wide Speed Hump .....tab 31

IC 32 - Meter Box Specifications for ¾ & 1" Service Laterals....tab 32
IC 33 - Driveway & Sidewalk Concrete & Rock Standards.....tab 33
IC 34 - Erosion Control Standards.....tab 34
IC 35 - Stormwater Quality Treatment Requirements.....tab 35
IC 36 - Sidewalk Ramps.....tab 36
IC 37 - Garbage and Recycling.....tab 37
IC 38 - Hydrants and blow-offs at dead-end water mains.....tab 38

# CITY OF TROUTDALE
# CONSTRUCTION DETAILS

## TABLE OF CONTENTS

### PART I - STREETS


Streets (General Requirements) ..... I - 1
Standards for Pavement Overlays ..... I - 4


### PART II - STREETS (Construction Details)


Commercial/Industrial Street (cross section) ..... II - 1
Neighborhood Collector (cross section) ..... II - 2
Local Street (cross section) ..... II - 3
Cul-de-sac & Intersection Radii ..... II - 4
Curbs & Weepholes ..... II - 5
Straight Curb ..... II - 6
Curb Knock-out for Driveways ..... II - 7
Concrete Cross Gutters ..... II - 8
Wheel Chair Ramps ..... II - 9
Concrete Sidewalk ..... II -10
Driveway Approach (Single Family Residential) ..... II - 11
Driveway Approach (Multi-Family Residential, Commercial/Industrial) ..... II - 12
Utility Easement Access Way ..... II - 13
Street Cut & Repairs ..... II - 14
Street Light Pole Location (back of walk) ..... II - 15
Street Light Pole Location (in landscaping strip) ..... II - 16
Mail Box Installations (cluster & single) ..... II - 17
Survey Monument & Box ..... II - 18
Street Barricade (Type II) ..... II - 19
Street Barricade (Types I & III) ..... II - 20
Public/Private Utility Locations ..... II - 21
Bomanite Pedestrian Crosswalk ..... II - 22
Neighborhood Watch Signs ..... II - 23

Private Street Sign.....II - 24
14' Wide Speed Hump .....II - 25
Gravel Construction Entrance .....II - 26
Not a Permanent Dead-End Street Sign .....II - 27
In-Concrete Sidewalk Street Sign Sleeve Detail.....II - 28

## PART III - WATER DISTRIBUTION SYSTEM

Water Distribution System (General Requirements).....III - 1

## PART IV - WATER DISTRIBUTION SYSTEM (Construction Details)

Thrust Blocks ..... IV - 1
Fire Hydrant Assembly (Behind Sidewalk) ..... IV - 2
Fire Hydrant Assembly (Behind Curb)..... IV - 3
Valve Box & Operator Extension Assembly ..... IV - 4
Air Release Valve Assembly ..... IV - 5
Air & Vacuum Release Valve Assembly..... IV - 6
Water Sampling Station ..... IV - 7
1" Double Water Service..... IV - 8
3/4" to 2" Single Water Service..... IV - 9
In Cul-de-sac Double/Single Service Configuration..... IV - 10
In Half Cul-de-sac Double/Single Service Configuration..... IV - 11
3" Diameter (and larger) Water Meter Vault..... IV - 12
Meter with Remote Reader & Vault..... IV - 13
Water Meter with Bypass Detail..... IV - 14
Pressure Regulating Vault .....IV - 15
Double Check Backflow Preventor Device Vault ..... IV - 16
Dead-end Blowoff Assembly ..... IV - 17
In-line Blowoff Assembly ..... IV - 18

## PART V - STORM SEWER COLLECTION SYSTEM

Storm Sewer Collection System
(General Requirements) .....V - 1

## PART VI - STORM SEWER COLLECTION SYSTEM
(Construction Details)


Catch Basin ..... VI - 1
Ditch Inlet ..... VI - 2
Flat Area Inlet (Unimproved Surfaces Only) ..... VI - 3
Flat Top Manhole (Storm Only) ..... VI - 4
Large Concrete Storm Manhole Bases ..... VI - 5
Drywell Detail ..... VI - 6
Storm Sewer Lateral & Marker (Shallow Trench) ..... VI - 7
Storm Sewer Lateral (Deep Trench) ..... VI - 8
Storm Manhole (48" Diameter) ..... VI - 9
Permitted Drywell Construction Area ..... VI - 10


## PART VII - SANITARY SEWER COLLECTION SYSTEM


Sanitary Sewer Collection System
(General Requirements) ..... VII - 1


## PART VIII - SANITARY SEWER COLLECTION SYSTEM
(Construction Details)


Sanitary Manhole (48" Diameter) ..... VIII - 1
Manhole Lids & Frames (Sanitary & Storm) ..... VIII - 2
48" Manhole Base (Sanitary or Storm) ..... VIII - 3
Trench Backfill, Bedding & Pipe Zone ..... VIII - 4
Inside Drop Connection for Manholes (San. or Storm) ..... VIII - 5
Outside Drop Connection for Manholes (San. or Storm) ..... VIII - 6
Cleanout ..... VIII - 7
Sanitary & Storm Manholes & Cleanouts Marker Post ..... VIII - 8
Sanitary Sewer Lateral & Marker (Shallow Trench) ..... VIII - 9
Sanitary Sewer Lateral (Deep Trench) ..... VIII - 10
Manhole Ring Adjustments (Sanitary & Storm) ..... VIII - 11
Cam-Lock Manhole Cover & Frame
(Cast Iron & Aluminum) ..... VIII - 12
Bore Casing Detail ..... VIII - 13
Concrete Cradle & Cap Detail ..... VIII - 14

Pipe Anchor Detail ..... VIII - 15
Concrete Apron Detail ..... VIII - 16

PART IX - EROSION CONTROL MEASURES
Erosion Control Measures
(General Requirements) ..... IX - 1

PART X - EROSION CONTROL MEASURES

(Construction Details)

Temporary Sediment Fence ..... X - 1
Temporary Straw Bale Silt Barrier ..... X - 2
Biofilter Bags in Ditches & Swales ..... X - 3
Biofilter Bag for Overland Water Flow (Option 1) ..... X - 4
Biofilter Bag for Overland Water Flow (Option 2) ..... X - 5
Biofilter Bag - Protected Catch Basin Detail ..... X - 6
Temporary Site Interceptor (Swales & Dikes) ..... X - 7
Erosion Control for Single Lots ..... X - 8
Filter Bag Inlet Detail ..... X - 9
Sediment Trap ..... X - 10
Sediment Pond ..... X - 11
Erosion Control Blanket Installation Detail ..... X - 12
Continuous Geosynthetic Berm ..... X - 13

PART XI - GARBAGE & RECYCLING CONTAINER ENCLOSURES

Garbage & Recycling Container Enclosures
(General Requirements) ..... XI - 1

PART XII - GARBAGE & RECYCLING CONTAINER ENCLOSURES

Garbage & Recycling Container Enclosures
(Construction Details)

Multi-Family Sample 1 ..... XII - 1
Multi-Family Sample 2 ..... XII - 2

**Multi-Family Sample 3 ..... XII - 3**
**Commercial Sample 1 ..... XII - 4**
**Commercial Sample 2 ..... XII - 5**
**Commercial Sample 3 ..... XII - 6**
**Commercial Sample 4 ..... XII - 7**
**Commercial Sample 5 ..... XII - 8**
**Commercial Sample 6 ..... XII - 9**

# Interim Changes

City of Troutdale
Public Works Department

# Memo

**TO:** **File**

**FROM:** **Jim Galloway, Public Works Director**

**DATE:** **July 23, 1999**

**RE:** **Construction Standards for Public Works Facilities May 1997: Interim Change #1**

---

Under the authority provided to me by City Council Resolution No. 1312, I have made the following interim changes to the "Construction Standards for Public Works Facilities" dated May, 1997, effective immediately:

1. Part VII (Sanitary Sewers), Paragraph 4, is changed to read: "Manholes shall be placed at all points of change in alignment or pipe size, breaks in grade, and at all intersections with pipes eight inches in diameter or larger. The maximum permissible spacing between manholes for pipes with a diameter of twelve inches or less shall be three hundred feet. The maximum permissible spacing between manholes for pipes with a diameter of more than twelve inches but less than twenty-four inches shall be four hundred feet. The maximum permissible spacing between manholes for pipes with a diameter of twenty-four inches or more shall be five hundred feet. Manholes shall not be located in areas which would restrict free access by maintenance personnel and vehicles."

2. Part VII (Sanitary Sewers), Paragraph 6, is changed to read: "Manholes less than sixty inches in diameter shall have a minimum of 0.2 foot drop from pipe invert "in" to pipe invert "out". Manholes sixty inches in diameter or larger shall have a minimum of 0.1 foot drop from pipe invert "in" to pipe invert "out". All sanitary sewer lines between manholes shall meet the minimum allowable slope requirements as established by DEQ or by general engineering principles.

   Drawing No. VIII-1, General Note 7, and Drawing No. VIII-3, General Note 5, are hereby changed accordingly. Superseded see IC#18

   These changes will be incorporated in the next update to the "Construction Standards for Public Works Facilities".

C:\PWJUL99

City of Troutdale
Public Works Department

# Memo

**TO:** FILE

**FROM:** JIM GALLOWAY, PUBLIC WORKS DIRECTOR

**DATE:** SEPTEMBER 13, 1999

**RE:** CONSTRUCTION STANDARDS FOR PUBLIC WORKS FACILITIES, MAY 1997: INTERIM CHANGE NO. 2

---

Under the authority provided to me by City Council Resolution No. 1312, I have made the following interim change to the "Construction Standards for Public Works Facilities" dated May, 1997, effective immediately: Water Distribution System (General Requirements), Paragraph 15, is changed to read as follows: "Each half of a duplex shall be served with an individual service line and an individual meter. In all other uses, only one meter will normally be allowed per tax lot. Exceptions may be granted by the Director in those situations where rigid adherence to this standard would be technically infeasible or prohibitively expensive. The applicant must request the exception in writing (with adequate justification) prior to the submission of construction drawings."

This change will be incorporated in the next update to the "Construction Standards for Public Works Facilities".

C:\PWSEP99

# Memo to File
# Change #3
# Rescinded

City of Troutdale
Public Works Department

# Memo

**TO:** **FILE**

**FROM:** **JIM GALLOWAY, PUBLIC WORKS DIRECTOR**

**DATE:** **JANUARY 25, 2000**

**RE:** **CONSTRUCTION STANDARDS FOR PUBLIC WORKS FACILITIES, MAY 1997: INTERIM CHANGE NO. 4**

---

Under the authority provided to me by City Council Resolution No. 1312, the following interim change is made to the "Construction Standards for Public Works Facilities" dated May, 1997, to bring the Standards into compliance with Ordinance No. 658.

Add to Part II – Streets (Construction Details) a new Drawing No. II-29 (attached).

This change will be incorporated in the next update to the "Construction Standards for Public Works Facilities".

c: Jerry
Ed
Mike
Christa
Travis

C:\PWJAN00

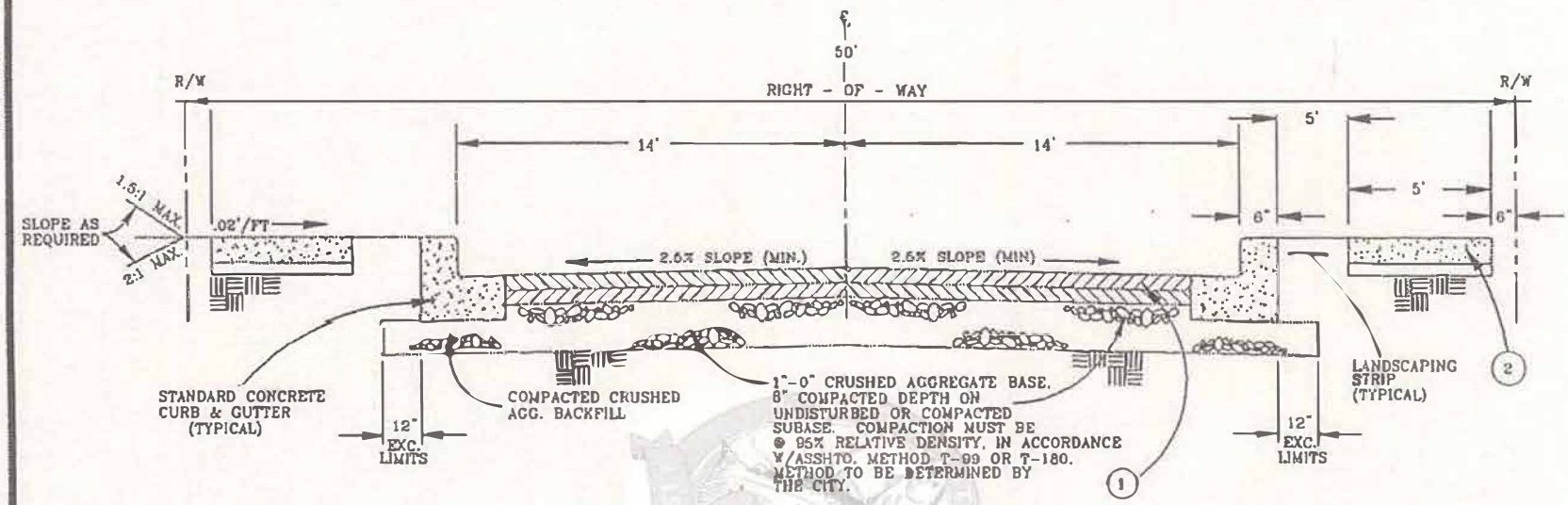


# TOWN CENTER OVERLAY DISTRICT CROSS SECTION

NOTES:

1. 3 1/2" OF ASPHALTIC CONCRETE CLASS "C" PLACED IN 2 LIFTS. 1ST LIFT SHALL BE 2" COMPACTED DEPTH. FINAL 1 1/2" LIFT WILL BE PLACED AFTER 90% OF THE CERTIFICATES OF OCCUPANCY HAVE BEEN ISSUED OR 2 YEARS AFTER THE FIRST LIFT, WHICHEVER COMES FIRST.
2. 4" THICK CONCRETE SIDEWALK ON MINIMUM OF 2" COMPACTED DEPTH OF 3/4" - 0 CRUSHED ROCK.

GENERAL:

1. THESE STANDARDS ARE SHOWN AS MINIMUM ALLOWABLE STANDARDS. THE CITY ENGINEER MAY REQUIRE MODIFICATIONS DUE TO ADVERSE SOIL CONDITIONS, TRAFFIC CONDITIONS, OR OTHER UNFORESEEN RELEVANT SITE CONDITIONS.
2. ALL MATERIALS AND WORKMANSHIP SHALL MEET THE REQUIREMENTS OF THE AMERICAN PUBLIC WORKS ASSOCIATION STANDARD SPECIFICATIONS.
3. DEFLECTION/COMPACTION TESTS WILL BE REQUIRED AS DEEMED NECESSARY BY THE CITY. NO DEFLECTION IS ALLOWED.
4. SUBGRADE MUST BE APPROVED BY THE CITY PRIOR TO PAVING.

CITY OF TROUTDALE

TOWN CENTER OVERLAY DISTRICT STREET (CROSS SECTION)

DATE: UPDATED 1999

DRAWING NO. II - 29

FILENAME: APWA01010.DWG

# Memo to File
# Change #5
# Rescinded

City of Troutdale
Public Works Department

# Memo

**DATE:** **AUGUST 10, 2001**

**TO:** **FILE**

**FROM:** **JIM GALLOWAY, PUBLIC WORKS DIRECTOR**

**RE:** **CONSTRUCTION STANDARDS FOR PUBLIC WORKS FACILITIES, MAY 1997: INTERIM CHANGE NO. 6**

---

Under the authority provided to me by City Council Resolution No. 1312, the following interim change is made to the "Construction Standards for Public Works Facilities" dated May, 1997:

Part II (Streets), Drawing No. II-26 (Gravel Construction Entrance) is amended as follows:

Delete: "Clean Pit Run or 2" minus gravel (or larger if required)"

Add: " 3" minus crushed rock"

c: Jerry Ortega
Ed Kubicki
Mike Sorensen
Rich Faith
Jack Hanna
Kevin Rauch

C:\PWAUG01\Construction Standards for Public Works Facilities dated May 1997 memo.doc

# Memo to File
# Change #7
# Rescinded

City of Troutdale
Public Works Department

# Memo

**DATE:** **MARCH 24, 2003**

**TO:** **FILE**

**FROM:** **JIM GALLOWAY, PUBLIC WORKS DIRECTOR**

**RE:** **CONSTRUCTION STANDARDS FOR PUBLIC WORKS FACILITIES, MAY 1997: INTERIM CHANGE NO. 8**

---

Under the authority provided to me by City Council Resolution No. 1312, the following interim change is made to the "Construction Standards for Public Works Facilities" dated May 1997:

Add to Part I (Streets) the following new paragraph:

29. Access management for driveways

    a. A driveway approach constructed in accordance with these standards is required for any driveway or private street accessing a public street. A wheel chair ramp or regular sidewalk section shall not be used as a driveway approach.

    b. Construction of a driveway approach in City right-of-way requires a Public Works permit. Construction of a driveway approach in the right-of-way of another jurisdiction requires a permit from that jurisdiction.

    c. When a property abuts two or more streets, the driveway access shall generally be to the street of lowest classification.

    d. A single-family residential property shall have only one access to an abutting street.

    e. A driveway shall not be closer than twenty (20) feet to a point of curvature or point of tangency of a curb return. (Dimensions "C" and "R", Figure 10, Page 19, "Guidelines for Driveway Location & Design", Institute for Transportation Engineers, 1987.

c: Travis Hultin
Ed Kubicki
Mike Sorensen
Kevin Rauch
Rich Faith

C:\PWCONSTAN03

# V. Recommended Guidelines

## Basic Driveways

Basic widths, curb spacing, radii, and angles of driveways suggested for various land uses in urban and rural areas are given in Table 2. Methods of measurement and portions of previous text are footnoted below the table and are illustrated in Figure 10.

In some driveway permit regulations, the term "curb cut" is used. The word "driveway" is preferred, since curb cut has little relation to the practical function of a driveway and may be confusing when applied to roadways without curbs. If used, curb cut should be clearly defined as representing the effective driveway width together with the curb radii on both sides. Control dimensions should be adjusted accordingly. Thus, a 30-foot (9 m) driveway with a 15-foot (5 m) radius on each side becomes a 60-foot (18 m) curb cut.

It should be stressed that these design values are *guidelines*. The dimensions should be adjusted by the driveway permit engineer as required to handle expected traffic conditions. Figure 11 illustrates a typical range of designs related to volumes.

Maximum widths have not been shown in Table 2, because these should vary with conditions. If an agency feels that maximums are necessary, the material in Table 2 footnote 1 may be used.

## Major Driveway Design Factors

Special care should be taken in designing driveways serving very high generation uses such as community and regional shopping centers, large industrial plants, major office building complexes, and high density apartment developments. Specific elements have been discussed under sections on volumes, successive entrances, angles, spacing, median cuts, sight distances, and paving. Shaw[39] found that left-turn bays could be justified on the basis of reductions in accidents and delays at typical major intersections having medians, and that the cost could be amortized by the savings in as short a period as five years. Presumably, similar findings would apply to major driveways with heavy volumes of left-turning vehicles. In fact, it is common practice at high generation developments to require left-turn bays or by-pass lanes on two-lane roads.

An unsignalized *major* driveway at grade may be considered to be similar to an unsignalized intersection as studied by Harmelink.[15] He found left-turn storage lanes to be justified for extremely low volumes, based on his design criteria. As shown in Figure 12, a left-turn volume of 50 vehicles per hour from a four-lane highway facing an opposing volume of 300 vehicles per hour, for example, would justify a left-turn bay 50 feet (15 m) in length. If the opposing volume was 1,100 vehicles per hour, a bay length of 100 feet (30 m) would be needed.

When left-turn bays are to be provided at major driveways, a

**Table 2. Recommended basic driveway dimension guidelines**

| | Dimension Reference (See Fig. 8) | Residential | Commercial | Industrial |
|---|---|---|---|---|
| Nominal Width[1] | W | | | |
| one-way | | 10 | 15 | 20 |
| two-way | | 10 | 30 | 40 |
| Right turn radius or flare[2] | R | | | |
| Minimum | | 5 | 15 | 20 |
| Minimum spacing[3] | | | | |
| From property line | P | 0 | 0 | −R |
| From street corner | C | 5 | 10 | 10 |
| Between driveways | S | 3 | 3 | 10 |
| Minimum Angle[4] | A | 45° | 45° | 30° |

1.0 ft. = 0.3m

[1]Residential driveway widths typically should not exceed about 24 feet (7 m). Commercial driveway widths may vary from about 24 feet for low volume activity (providing that 20 foot radii are used), to a maximum of 36 feet (11 m) for undivided design, higher volume activity. A 36 foot (11 m) driveway is usually marked with two exit lanes of 10 to 11 foot (3 m) width, with the balance used for a single, wide entry lane. Industrial driveway widths should not exceed 50 feet (17 m).

[2]On the side of a driveway exposed to entry or exit by right turning vehicles. The radii for major generator driveways such as shown in Figures 5 and 6 should be much higher than the values shown.

[3]Measured along the curb or edge of pavement from the roadway end of the curb radius or flare, except for conditions noted in Figure 7. For individual properties, a suggested limitation on the number of driveways is: 1 for 0-50 foot (0-15 m) frontage, 2 for 51-150 foot (16-50 m) frontage, 3 for 151-500 foot (51-150 m) frontage, and a 4 for over 500 (over 150 m) frontage.

[4]Minimum acute angle measured from edge of pavement, and generally based on one-way operation. For two-way driveways and in high pedestrian activity areas, the minimum angle should be 70 degrees.

minimum spacing is automatically established for successive driveways that are to have left turn entry or exit. The basic factors are the distance required for the median taper (a 10:1 ratio) and the length of the storage bay. If a driveway on a major route is opposite a street, a left-turn bay for the street also should be incorporated. This will further increase the required distance between major driveways.

The distance of a major driveway, with left-turn channelization from a nearby major intersection which also has left-turn bays, will vary depending on whether the driveway is on the approach or departure side of the intersection with respect to the left-turn lane.[10] This may be illustrated by two examples. Assume a north/south route and a requirement for a northbound left-turn bay to a major driveway. Assume that a bay 100 feet (30 m) long is needed. If the major intersection is north of the driveway and requires a left-turn bay 200 feet (60 m) long with a 120-foot (36 m) taper, the closest permissible location for a driveway would be 320 feet (100 m) from the intersection. If the intersection is *south* of the driveway, the required distance would be equal to the length of the left-turn storage bay for southbound traffic at the intersection, the taper, and the left-turn bay for the major driveway. These dimensions add up to a minimum distance from the intersection of 420 feet (130 m) for a driveway.

These examples show the problems of attempting to specify the distances, consistent with actual traffic needs, that driveways should be from intersections. It is important that driveways be designed for the *particular* traffic characteristics anticipated and that upstream and downstream factors affecting a driveway location be considered in each instance.

As discussed under successive entrances, the entry movement to

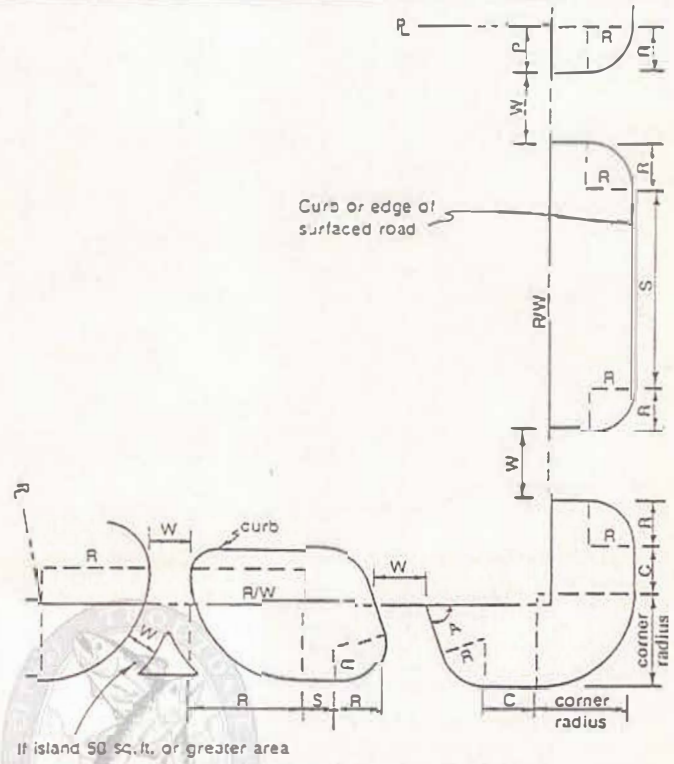


Figure 10. *Driveway dimensions measurements (see Table 2).*

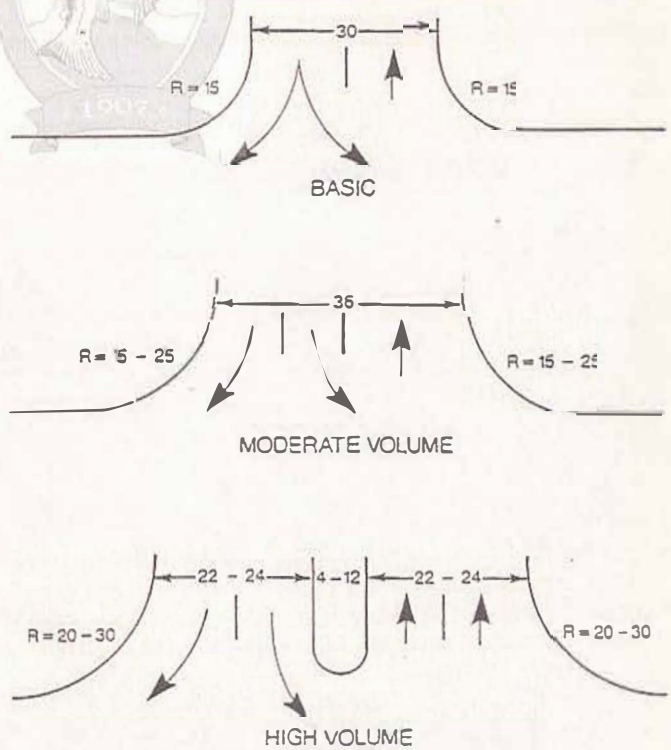


Figure 11. *2-way commercial driveway design. Dimensions are in feet.*

# Memo to File

# IC #9

# Superseded by IC#10

**IC No. 10 Superseded by IC No. 36**

# Memo to File
# IC #10
# Superseded by IC#19

City of Troutdale
Public Works Department

# *Memo*

**DATE:** **JANUARY 27, 2004**

**TO:** **FILE**

**FROM:** **JIM GALLOWAY, PUBLIC WORKS DIRECTOR**

**RE:** **CONSTRUCTION STANDARDS FOR PUBLIC WORKS FACILITIES MAY 1997: Interim Change No. 11**

---

Under the authority provided to me by City Council Resolution No. 1312, the following interim change is made to the "Construction Standards for Public Works Facilities" dated May, 1997:

1. Replace statement #5 under the heading "Conditions Where Practice Applies" on Page IX – 14 with the following: See Detail Drawing X – 9 for Filter Bag Inlet Detail for catch basin protection.

2. Drawing No. X – 6 titled "Biofilter Bag-Protected Catch Basins Detail should be removed.

Cc: Ed Kubicki
Mike Sorensen
Travis Hultin
Kevin Rauch
Amy Pepper
Rich Faith
Jack Hanna

City of Troutdale
Public Works Department

# *Memo*

**DATE:** **NOVEMBER 2, 2004**

**TO:** **FILE**

**FROM:** **JIM GALLOWAY, PUBLIC WORKS DIRECTOR**

**RE:** **CONSTRUCTION STANDARDS FOR PUBLIC WORKS FACILITIES – MAY 1997: Interim Change No. 12**

---

Under the authority provided to me by City Council Resolution No. 1312, the following interim change is made to the "Construction Standards for Public Works Facilities" dated May, 1997:

1. Part III (Water – General Requirements), Paragraph 10 is amended to add "M & H Style 129 Fire Hydrant".

2. Part IV (Water – Construction Details), Drawing No. IV-2, "General Notes" is amended to change Paragraph 7E to read "M & H Style 129" and to add Paragraph 7F to read: "Or approved equal".

Superseded see IC #20

3. Part IV (Water – Construction Details), Drawing No. IV-3, "General Notes" is amended to change Paragraph 7E to read "M & H Style 129" and to add Paragraph 7F to read: "Or approved equal".

c: Travis Hultin
Kevin Rauch
Mike Sorensen
Olaf Sweetman
Amy Pepper
Rich Faith

C:\STAN04

City of Troutdale
Public Works Department

# *Memo*

**DATE:** **JANUARY 18, 2005**

**TO:** **FILE**

**FROM:** **JIM GALLOWAY, PUBLIC WORKS DIRECTOR**

**RE:** **CONSTRUCTION STANDARDS FOR PUBLIC WORKS FACILITIES MAY 1997: INTERIM CHANGE NO. 13**

---

Under the authority provided to me by City Council Resolution No. 1312, the following interim change is made to the "Construction Standards for Public Works Facilities" dated May, 1997:

> Part I (Streets – General Requirements), Paragraph 26, which required the certification of buildable lots, is deleted.

c: Travis Hultin
Kevin Rauch
Mike Sorensen
Olaf Sweetman
Amy Pepper
Rich Faith

C:\PWJAN05

City of Troutdale
Public Works Department

# *Memo*

**DATE:** **FEBRUARY 2, 2005**

**TO:** **FILE**

**FROM:** **JIM GALLOWAY, PUBLIC WORKS DIRECTOR**

**RE:** **CONSTRUCTION STANDARDS FOR PUBLIC WORKS FACILITIES MAY 1997: INTERIM CHANGE NO. 14**

---

Under the authority provided to me by City Council Resolution No. 1312, the following interim change is made to the "Construction Standards for Public Works Facilities" dated May, 1997:

Part III (Water – General Requirements), Paragraph 24 is amended to delete the following:

- 1 1/2" and 2" Neptune water meters.
- Neptune Trident fire hydrant meter.
- Neptune Trident turbine meter.

c: Travis
Kevin
Mike
Olaf
Amy
Rich

C:\PWJAN05

City of Troutdale
Public Works Department

# Memo

**DATE:** AUGUST 30, 2005

**TO:** FILE

**FROM:** JIM GALLOWAY, PUBLIC WORKS DIRECTOR TH/ FOR JG

**RE:** CONSTRUCTION STANDARDS FOR PUBLIC WORKS FACILITIES MAY 1997: INTERIM CHANGE NO. 15

---

Under the authority provided to me by City Council Resolution No. 1312, the following interim change is made to the "Construction Standards for Public Works Facilities" dated May, 1997:

Part V (Storm Sewer Collection - General Requirements):

1. Change Paragraph 4 to read: "Storm sewer design for subdivisions shall be designed to control the 2-year, 24-hour post-development peak flow rate to the pre-development erosion –initiating rate (one-half of the 2-year, 24-hour flow rate). The facilities shall also control the post-development flows from the 5-, 10-, and 25-year, 24-hour peak flows to the pre-development 5-, 10-, and 25-year, 24-hour flow rates. Use either the rational and/or the Santa Barbara method to determine the rate and volume of discharge."
2. Change Paragraph 7 to read: "Rainfall coefficients shall be based on the ultimate development planned or the land use shown in the City of Troutdale Comprehensive Land Use Plan."
3. Add the following paragraph: "Stormwater quality treatment shall comply with the 2002 *Stormwater Management Manual*, City of Portland Bureau of Environmental Services."

**Paragraph 3 rescinded. See Interim Change #25 paragraph 1 for wording.**

c: Travis Hultin
Kevin Rauch
Mike Sorensen
Olaf Sweetman
Amy Pepper
Rich Faith

C:\PWAUG05

# *Memo*

**DATE:** 5/2/2007

**TO:** FILE

**FROM:** JIM GALLOWAY, PUBLIC WORKS DIRECTOR Jim

**RE:** CONSTRUCTION STANDARDS FOR PUBLIC WORKS FACILITIES, MAY 1997: INTERIM CHANGE NO. 16

---

Under the authority provided to me by City Council Resolution No. 1312, the following interim change is made to the "Construction Standards for Public Works Facilities" dated May, 1997:

Part V (Storm Sewer Collection – General Comments):

1. Change Paragraph 6 to read: "Rainfall intensities used for storm sewer analysis and/or design shall be those published by the National Oceanic and Atmospheric Administration for Troutdale, Oregon. NOAA 24-hour rainfall depths for Troutdale are:

   2-year, 24-hour - 2.7"
   5-year, 24-hour - 3.3"
   10-year, 24-hour - 3.8"
   25-year, 24-hour - 4.1"

   For rational method calculations, intensity-duration-recurrence curves for Zone 8 in the Oregon Department of Transportation Hydraulics Manual shall be used."

# *Memo*

**DATE:** **July 2, 2007**

**TO:** **FILE**

**FROM:** **JIM GALLOWAY, PUBLIC WORKS DIRECTOR** Jim

**RE:** **CONSTRUCTION STANDARDS FOR PUBLIC WORKS FACILITIES, MAY 1997: INTERIM CHANGE NO. 17**

---

Under the authority provided to me by City Council Resolution No. 1312, the following interim change is made to the "Construction Standards for Public Works Facilities" dated May, 1997:

Drawing No. II-1 (Commercial/Industrial Street Cross Section) Updated 1997 is replaced with the attached Drawing No. II-1.1 (Commercial/Industrial Street Cross Section) Updated 2007.

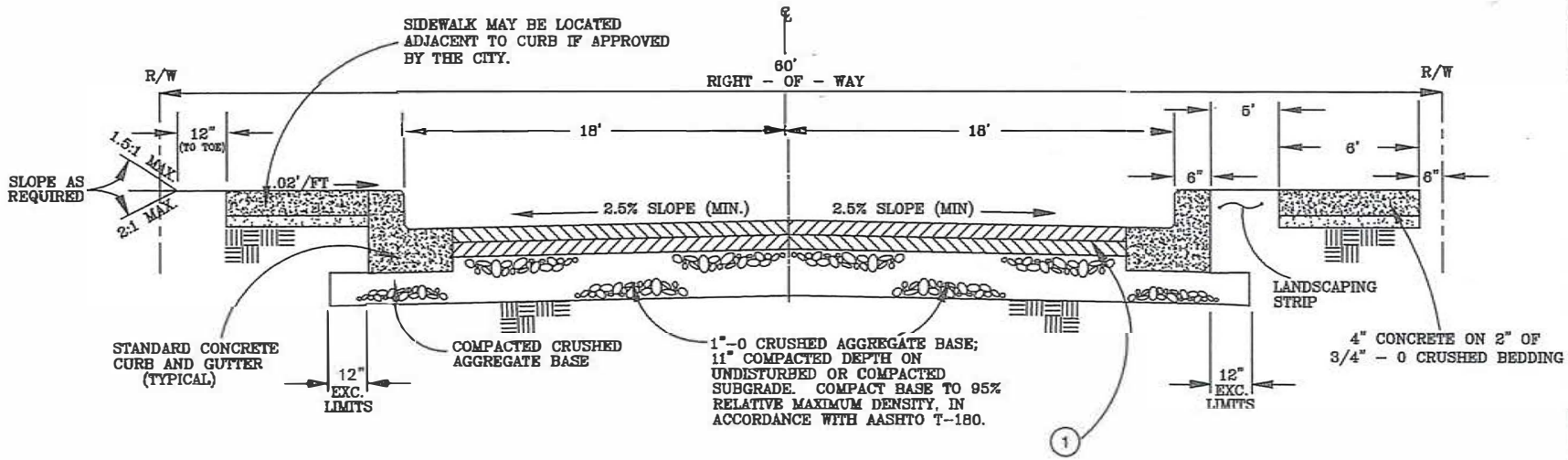


# COMMERCIAL/INDUSTRIAL STREET CROSS SECTION (NTS)

NOTES:

(1) 4" OF ASPHALTIC CONCRETE, LEVEL 2, 1/2" (12.5mm) SUPERPAVE MIX (APWA/ODOT SPECS) PLACED IN 2 EQUAL LIFTS OF 2" COMPACTED DEPTH EACH. COMPACT EACH LIFT TO 91% RMD. THE FINAL 2" LIFT WILL BE PLACED AFTER 90% OF THE LOTS ARE OCCUPIED OR 2 YEARS AFTER PLACEMENT OF THE FIRST LIFT, WHICHEVER OCCURS FIRST. THE CITY MAY REQUIRE, AT ITS SOLE DISCRETION, THAT BOTH LIFTS BE PLACED AT THE SAME TIME.

GENERAL:

1. THESE STANDARDS ARE SHOWN AS MINIMUM ALLOWABLE STANDARDS. THE CITY MAY REQUIRE MODIFICATIONS DUE TO ADVERSE SOIL CONDITIONS, SPECIAL TRAFFIC CONDITIONS OR OTHER UNFORESEEN RELEVANT FACTORS.
2. ALL MATERIAL AND WORKMANSHIP SHALL MEET THE REQUIREMENTS OF THE AMERICAN PUBLIC WORKS ASSOCIATION STANDARD SPECIFICATIONS.
3. DEFLECTION/COMPACTION TESTS WILL BE REQUIRED AS DEEMED NECESSARY BY THE CITY. NO DEFLECTION IS ALLOWED.
4. SUBGRADE MUST BE APPROVED BY THE CITY PRIOR TO PLACEMENT OF BASE ROCK. BASE MUST BE APPROVED BY THE CITY PRIOR TO PLACEMENT OF ASPHALT CONCRETE.

CITY OF TROUTDALE

COMMERCIAL/INDUSTRIAL STREET CROSS SECTION

DATE: UPDATED 2007

DRAWING NO. II - 1.1

FILENAME: AFWA0140.DWG

City of Troutdale
Public Works

# Memo

**TO:** **FILE**

**FROM:** **JIM GALLOWAY, PUBLIC WORKS DIRECTOR**

**DATE:** **FEBRUARY 28, 2008**

**RE:** **CONSTRUCTION STANDARDS FOR PUBLIC WORKS FACILITIES, MAY 1997: INTERIM CHANGE NO. 18**

---

Under the authority provided to me by City Council Resolution No. 1312, the following interim change is made to the "Construction Standards for Public Works Facilities" dated May 1997:

Drawing No. VIII-3 (48" Manhole Base (Sanitary or Storm)) Updated 1997 is replaced with ODOT/APWA standard drawing RD-344 (Standard Manhole Base Section), attached.

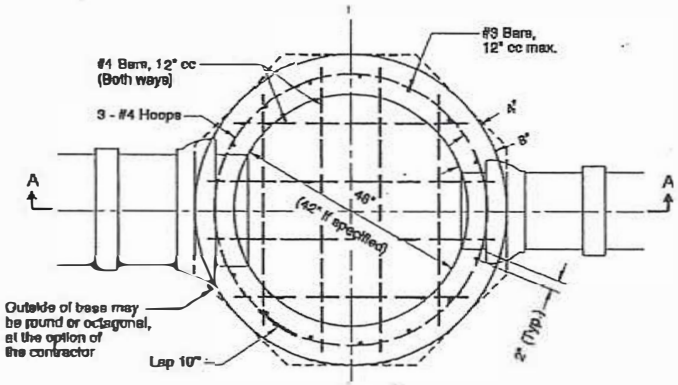


PLAN

All metal reinforcement shall be 2" clear of nearest face of conc., unless otherwise shown.

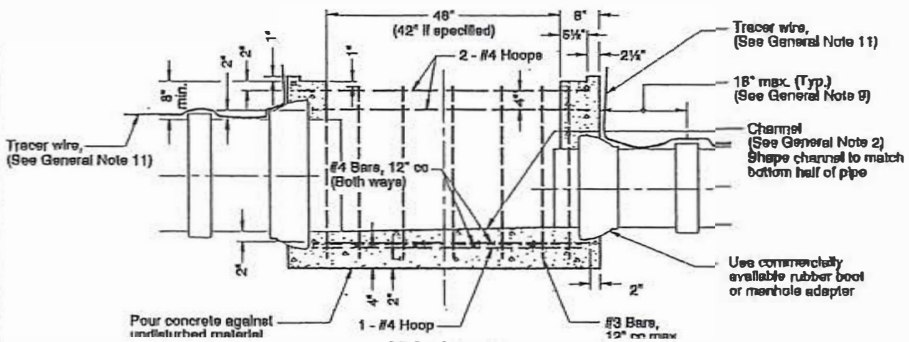


SECTION A-A

## CAST IN PLACE MANHOLE BASE

(For invert channel details, see precast option at right)

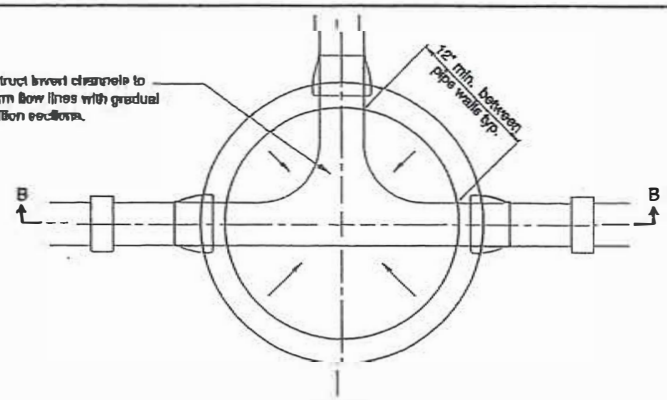


PLAN

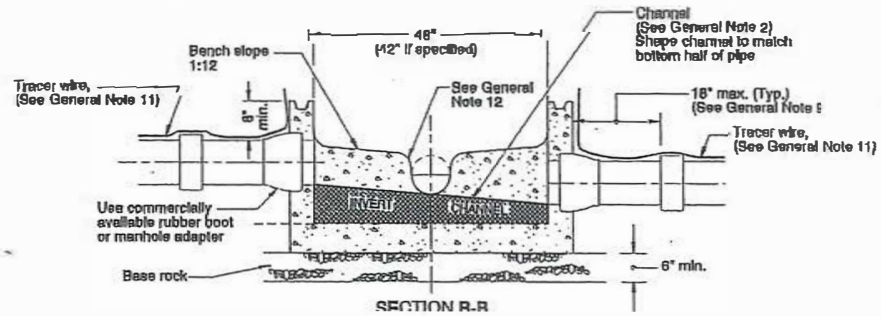


SECTION B-B

## PRECAST MANHOLE BASE

GENERAL NOTES FOR ALL DETAILS:

1. Concrete shall be Commercial Grade Concrete.
2. Channels shall be constructed to provide smooth slopes and radii to outlet pipe.
3. Bases may be precast or cast in place.
4. This manhole base section shall be used for pipe sizes up to 24".
5. Use on 42" and 48" diameter manhole.
6. Extend pipe into manhole and grout smooth. Pipe(s) may extend 2" max. beyond the interior manhole wall.
7. Location, elevation, and number of pipe(s) varies.
8. All precast sections shall conform to the requirements of ASTM C478.
9. All connecting pipes shall have a flexible, gasketted and unrestrained joint within 18" of manhole wall.
10. See Std. Drg. RD338 for manhole steps details.
11. See Std. Drg. RD336 for tracer wire details.
12. At spring line of pipe, extend channel up to crown line on 12:1 batter.

CKLD. BOOK NO.

*The selection and use of this Standard Drawing, while designed in accordance with generally accepted engineering principles and practices, is the sole responsibility of the user and should not be used without consulting a Registered Professional Engineer.*

SAMPLING REPORT DATE

NOTE: All material and workmanship shall be in accordance with the current Oregon Standard Specifications

OREGON STANDARD DRAWINGS

STANDARD MANHOLE BASE SECTION

2002

| DATE | REVISION DESCRIPTION |
|---|---|
| 9-94 | ADDED STANDARD STANDARD |
| 01-2002 | ADDED DETAIL, REVISED DRAWING TITLE, DETAILS & NOTES |

**Effective Date: November 1, 2007 - May 31, 2008**

RD344

rd344.dgn 12-JAN-2007

RD344

# Memo to File
# Change #19
# Rescinded
# See IC 30

**City of Troutdale**
**Public Works Department**

# Memo

**DATE:** 5/17/2012

**TO:** FILE

**FROM:** CHARLIE WARREN, PUBLIC WORKS DIRECTOR

**RE:** CONSTRUCTION STANDARDS FOR PUBLIC WORKS FACILITIES, MAY 1997: INTERIM CHANGE NO. 20

---

Under the authority provided to me by City Council Resolution No. 1312, the following interim change is made to the "Construction Standards for Public Works Facilities" date May, 1997:

1. Replace Standard Drawing IV-2, "Fire Hydrant Assembly (Behind Sidewalk), with the attached drawing RD 254-CoTA, "Hydrant Assembly (Behind Sidewalk)" [Attached]

2. Replace Standard Drawing IV-3, "Fire Hydrant Assembly (Behind Curb), with the attached drawing RD 254-CoTA, "Hydrant Assembly (In Landscaping Strip)" [Attached]

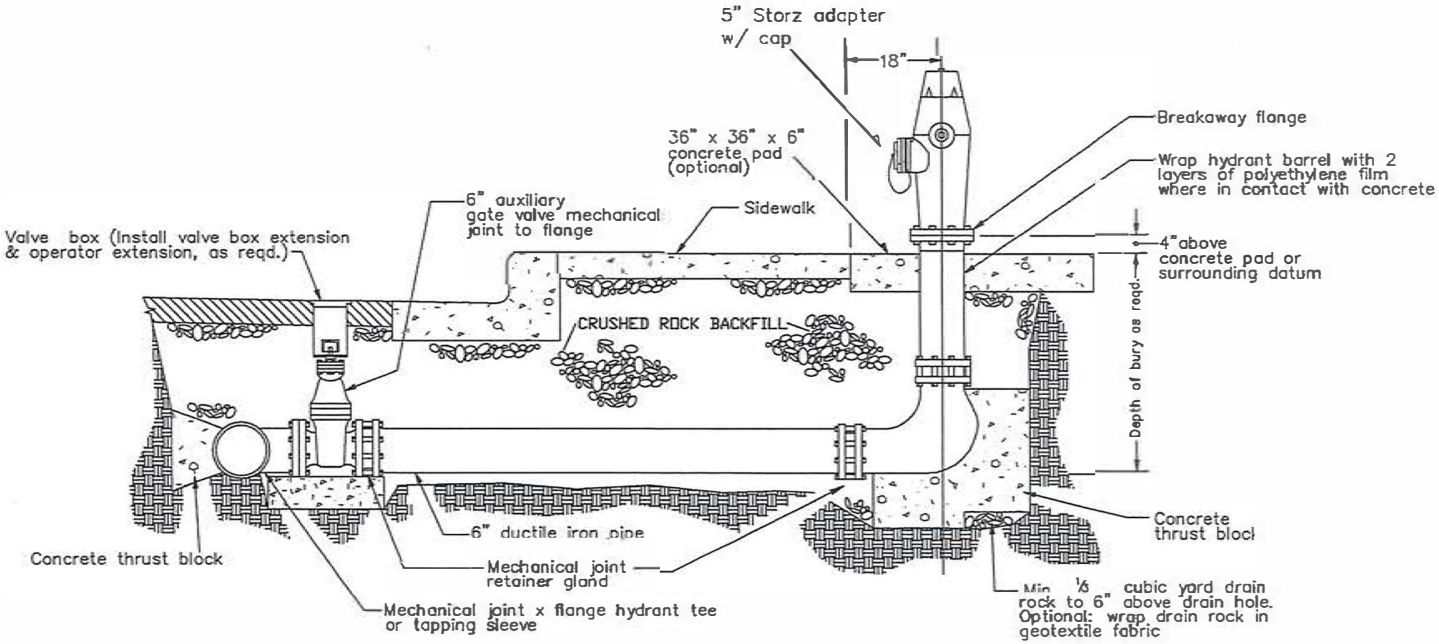


NOT TO SCALE

**GENERAL NOTES:**

1. When placed in landscaping strip, see detail RD 254-COT B.
2. When pipe is longer than 18' retainer glands not required.
3. When pipe is shorter than 18', no joints allowed. Use mechanical joint retainer glands.
   Two ¾" galvanized tie rods may be used in lieu of thrust blocks for installations less than 18' long.
   Coat tie rods with two coats of coal tar epoxy.
4. Concrete thrust blocks shall be constructed as per thrust blocking Std. Drg. RD250. Do not block drain holes
5. Extensions required for hydrant systems shall be installed to the manufacturer's specifications.
6. Hydrants shall be placed to provide a minimum of 5' clearance from driveways, poles, and other obstructions.
7. Hydrant pumper port shall face direction of access.
8. Set hydrant plumb in all directions.
9. Public hydrants shall be painted safety yellow. Private hydrants safety red.
10. 5" Storz adapter (NST) with pressure cap shall be installed on the 4 ½" port.
11. Storz adapter and cap shall be high-strength aluminum alloy. Cap shall be attached to the hydrant barrel or adapter with tamper-proof cable.
12. Storz adapter shall have Teflon coated seat and threads with rubber gasket and set screws.

**HYDRANT MODELS ALLOWED**

A. Mueller 200
B. Waterous Pacer 6790
C. Kennedy K-81 Guardian
D. Clow Medallion
E. M&H Style 129
F. Approved equal

Title: Hydrant Assembly (Behind Sidewalk)

| Drawing #: RD254-CoTA | File Name: RD254 COT A.dwg | |
|---|---|---|
| Date: 5/17/2012 | Drawn by: TH | |
| REVISIONS | | |
| Date | Description | By |
| 5/17/2012 | Interim Change #20 Issued | TH |
| | | |
| | | |

Public Works Dept. 342 SW 4th St., Troutdale, OR 97060 503-674-3300

CITY of TROUTDALE 1907

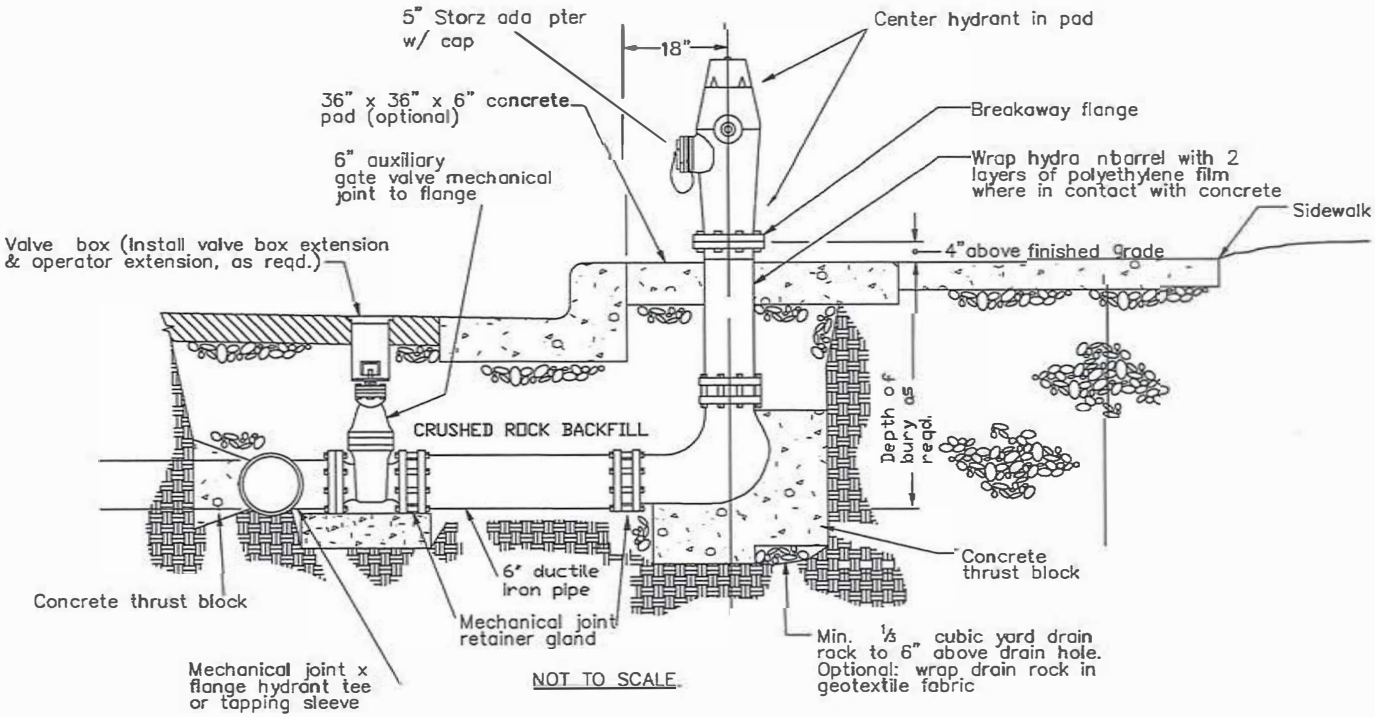


**GENERAL NOTES:**

1. When placed in landscaping strip, see detail RD 254-COT B.
2. When pipe is longer than 18' retainer glands not required.
3. When pipe is shorter than 18', no joints allowed. Use mechanical joint retainer glands.
   Two ¾" galvanized tie rods may be used in lieu of thrust blocks for installations less than 18' long.
   Coat tie rods with two coats of coal tar epoxy.
4. Concrete thrust blocks shall be constructed as per thrust blocking Std. Drg. RD250. Do not block drain holes
5. Extensions required for hydrant systems shall be installed to the manufacturer's specifications.
6. Hydrants shall be placed to provide a minimum of 5' clearance from driveways, poles, and other obstructions.
7. Hydrant pumper port shall face direction of access.
8. Set hydrant plumb in all directions.
9. Public hydrants shall be painted safety yellow. Private hydrants safety red.
10. 5" Storz adapter (NST) with pressure cap shall be installed on the 4½" port.
11. Storz adapter and cap shall be high-strength aluminum alloy. Cap shall be attached to the hydrant barrel or adapter with tamper-proof cable.
12. Storz adapter shall have Teflon coated seat and threads with rubber gasket and set screws.

**HYDRANT MODELS ALLOWED.**

A. Mueller 200
B. Waterous Pacer 6790
C. Kennedy K-81 Guardian
D. Clow Medallion
E. M&H Style 129
F. Approved equal

Title: Hydrant Assembly (In Landscaping Strip)

| Drawing #: RD254-CoTB | File Name: RD254 COT B.dwg | |
|---|---|---|
| Date: 5/17/2012 | Drawn by: AH, TH | |
| REVISIONS | | |
| Date | Description | By |
| 5/17/2012 | Interim Chg #20 Issued | TH |
| | | |
| | | |

Public Works Dept. 342 SW 4th St., Troutdale, OR 97060 503-674-3300

CITY of TROUTDALE 1907

# Memo

**City of Troutdale**
**Public Works Department**

**DATE:** June 21, 2013

**TO:** FILE

**FROM:** TRAVIS HULTIN, CHIEF ENGINEER/ACTING PUBLIC WORKS DIRECTOR TH

**RE:** CONSTRUCTION STANDARDS FOR PUBLIC WORKS FACILITIES, MAY 1997: INTERIM CHANGE #21

---

Under the authority provided to me by City Council Resolution No. 1312, the following interim change is made to the "Construction Standards for Public Works Facilities" dated May 1997:

Part I (Streets – General Comments):

1. Change Paragraph 1 to read: "Elevations for vertical control in construction plans and as-built drawings shall be based on the North American Vertical Datum of 1988 (NAVD88)."

2. Add the following paragraph: At a minimum, the following typical features shall be field-surveyed post-construction to establish as-built positions and elevations to the nearest 0.01 feet (one hundredth foot):

   a. Manhole and drywell rims, inverts and, if applicable, sump-bottoms.
   b. Catch basin and inlet rims, inverts and sump-bottoms
   c. Storm water outfall inverts
   d. Cleanout rims and inverts
   e. Fire hydrants (top nut)
   f. Flow control structure inverts and orifices
   g. Water valves (operating nut) and Water valve can lid rims
   h. Public street centerlines/monuments
   i. Curb return PC's and PT's
   j. Sanitary sewer lateral stub-ends
   k. Storm sewer lateral stub-ends
   l. Water service laterals (at crossing of curb) and meter boxes (horizontal only for both)

The Engineer may designate additional features to be post-surveyed for a project, as needed. As-built drawings provided to the City shall incorporate the post survey results, with all listed items reflected in their true as-built locations and elevations.

# Memo

**City of Troutdale**
**Public Works Department**

**DATE:** **April 22, 2014**

**TO:** **FILE**

**FROM:** **Steve Gaschler, Public Works Director**

**RE:** **CONSTRUCTION STANDARDS FOR PUBLIC WORKS FACILITIES, MAY 1997: INTERIM CHANGE #22 – Water System State Plan Review Exemption**

---

Under the authority provided to me by City Council Resolution No. 1312, the following interim change is made to the "Construction Standards for Public Works Facilities" dated May 1997:

Part III (Water Distribution System – General Comments):

Paragraph 27 is deleted and replaced with the following:

3. The City of Troutdale has received a plan review exemption from the Oregon Health Authority - Drinking Water Program (OHA-DWP) for water main extensions.

    a. Water main extension plans are not submitted to OHA-DWP for review and the OHA-DWP plan review fee is not applicable. The City will conduct review of water main extension plans and the developer must receive approval by the City prior to commencing construction.

    b. *OAR 333-061-050, Public Water Systems, Construction Standards* is hereby incorporated into the City of Troutdale *Construction Standards for Public Works Facilities.* Where these OHA-DWP standards differ from other City-adopted construction standards, the more stringent standard shall apply.

    c. Wells, spring sources, surface water sources, water treatment facilities, facilities for continuous disinfection and disinfectant residual maintenance, finished water sources, and pumping facilities are not exempted and must be submitted to OHA-DWP in accordance with *OAR 333-061-060*. Plans in these categories must be initially reviewed and approved by the City. Developer shall provide copies of the City-approved plans and the OHA-DWP plan review fee to the City and the City shall submit the plans and fee to OHA-DWP. Plans must receive OHA-DWP approval prior to commencing construction.

**OAR 333-061-050 – Construction Standards**

**Oregon Health Authority – Drinking Water Program**

(1) General:

(a) These standards shall apply to the construction of new public water systems and to major additions or modifications to existing public water systems and are intended to assure that the system facilities, when constructed, will be free of public health hazards and will be capable of producing water which consistently complies with the maximum contaminant levels;

(b) Facilities at public water systems must comply with the construction standards in place at the time the facility was constructed or installed for use at a public water system. A public water system shall not be required to undertake alterations to existing facilities, unless the standard is listed as a significant deficiency as prescribed in OAR 333-061-0076(4) and that creates a public health hazard, or if maximum contaminant levels are being exceeded.

(c) Non-public water systems that are converted to public water systems shall be modified as necessary to conform to the requirements of this rule.

(d) Facilities at public water systems shall be designed and constructed in a manner such that contamination will be effectively excluded, and the structures and piping will be capable of safely withstanding external and internal forces acting upon them;

(e) Only materials designed for potable water service and meeting NSF Standard 61, Section 9 -Drinking Water System Components — Health Effects (Revised September, 1994) or equivalent shall be used in those elements of the water system which are in contact with potable water;

(f) New tanks, pumps, equipment, pipe valves and fittings shall be used in the construction of new public water systems, major additions or major modifications to existing water systems. The Authority may permit the use of used items when it can be demonstrated that they have been renovated and are suitable for use in public water systems;

(g) Prior to construction of new facilities, the water supplier shall submit plans to the Authority for approval as specified in OAR 333-061-0060(1)(a).

(h) Construction may deviate from the requirements of this section provided that documentation is submitted, to the satisfaction of the Authority, that the deviation is equal to or superior to the requirements of this section as specified in OAR 333-061-0055 (variances from construction standards).

(i) A public water system or other Responsible Management Authority using groundwater, or groundwater under the direct influence of surface water, derived from springs, confined or unconfined wells that wish to have a state certified wellhead protection program shall comply with the requirements as specified in OAR 333-061-0057, 0060, and 0065, as well as OAR 340-040-0140 through 0200. Additional technical information is available in the Oregon Wellhead Protection Guidance Manual.

(j) All new groundwater sources are subject to consideration for potential direct influence of surface water as prescribed in OAR 333-061-0032(7).

***

(8) Distribution systems:

(a) Wherever possible, distribution pipelines shall be located on public property. Where pipelines are required to pass through private property, easements shall be obtained from the property owner and shall be recorded with the county clerk;

(b) Pipe, pipe fittings, valves and other appurtenances utilized at Community water systems shall be manufactured, installed and tested in conformance with the latest standards of the American Water Works Association, NSF International or other equivalent standards acceptable to the Authority;

(c) In Community water systems, distribution mains located in public roadways or easements, and the portion of the service connections from the distribution main to the customer's property line or service meter where provided are subject to the requirements of these rules. The piping from the customer's property line, or the meter where provided, to the point of water use (the building supply line) is subject to the requirements of the State Plumbing Code;

(d) In all Public Water Systems where the system facilities and the premises being served are both on the same parcel of property, requirements relating to pipe materials and pipe installation shall comply with the State Plumbing Code;

(e) Distribution piping shall be designed and installed so that the pressure measured at the property line in the case of Community water systems, or at the furthest point of water use, in the case of a Transient Non-Community water system of the type described in subsection (d) of this section, shall not be reduced below 20 psi;

(f) Distribution piping shall be carefully bedded and fully supported in material free from rocks and shall be provided with a cover of at least 30 inches. Select backfill material shall be tamped in layers around and over the pipe to support and protect it. Large rocks or boulders shall not be used as backfill over the pipe;

(g) Provision shall be made at all bends, tees, plugs, and hydrants to prevent movement of the pipe or fitting;

(h) Wherever possible, dead ends shall be minimized by looping. Where dead ends are installed, or low points exist, blow-offs of adequate size shall be provided for flushing;

(i) Air-relief valves shall be installed at high points where air can accumulate. The breather tube on air-relief valves shall be extended above ground surface and provided with a screened, downward facing elbow;

(j) Yarn, oakum, lead or other material which may impair water quality shall not be used where it will be in contact with potable water;

(k) Nonconductive water pipe (plastic or other material) that is not encased in conductive pipe or casing must have an electrically conductive wire or other approved conductor for locating the pipe when the

pipeline is underground. The wire shall be No. 18 AWG (minimum) solid copper with blue colored insulation. Ends of wire shall be accessible in water meter boxes, valve boxes or casings, or outside the foundation of buildings where the pipeline enters the building. The distance between tracer lead access locations shall not be more than 1,000 feet. Joints or splices in wire shall be waterproof.

(I) Piping that is to be used for disinfection contact time shall be verified by plug flow calculations under maximum flow conditions.

(9) Crossings-Sanitary sewers and water lines:

(a) All reference to sewers in this section shall mean sanitary sewers;

(b) In situations involving a water line parallel to a sewer main or sewer lateral, the separation between the two shall be as indicated in Figure 1; [Figure not included. See ED NOTE.]

(c) In situations where a water line and a sewer main or sewer lateral cross, the separation between the two shall be as follows:

(A) Wherever possible, the bottom of the water line shall be 1.5 feet or more above the top of the sewer line and one full length of the water line shall be centered at the crossing;

(B) Where the water line crosses over the sewer line but with a clearance of less than 1.5 feet, the sewer line shall be exposed to the sewer line joints on both sides of the crossing to permit examination of the sewer pipe. If the sewer pipe is in good condition and there is no evidence of leakage from the sewer line, the 1.5-foot separation may be reduced. However, in this situation, the water supplier must center one length of the water line at the crossing and must prepare a written report of the findings and indicating the reasons for reducing the separation. If the water supplier determines that the conditions are not favorable or finds evidence of leakage from the sewer line, the sewer line shall be replaced with a full length of pipe centered at the crossing point, of PVC pressure pipe (ASTM D-2241, SDR 32.5), high-density PE pipe (Drisco pipe 1000), ductile-iron Class 50 (AWWA C-51), or other acceptable pipe; or the sewer shall be encased in a reinforced concrete jacket for a distance of 10 feet on both sides of the crossing.

(C) Where the water line crosses under the sewer line, the water supplier shall expose the sewer line and examine it as indicated in paragraph (9)(c)(B) of this rule. If conditions are favorable and there is no evidence of leakage from the sewer line, the sewer line may be left in place, but special precautions must be taken to assure that the backfill material over the water line in the vicinity of the crossing is thoroughly tamped in order to prevent settlement which could result in the leakage of sewage. In this situation, the water supplier must center one length of the water line at the crossing and must prepare a written report recording the manner in which the sewer line was supported at the crossing and the material and methods used in backfilling and tamping to prevent settlement of the sewer. If the water supplier determines that conditions are not favorable or finds evidence of leakage from the sewer line, the provisions of paragraph (9)(c)(B) of this rule apply.

(d) When a water main is installed under a stream or other watercourse, a minimum cover of 30 inches shall be provided over the pipe. Where the watercourse is more than 15 feet wide, the pipe shall be of

special construction with flexible watertight joints, valves shall be provided on both sides of the crossing so that the section can be isolated for testing or repair, and test cocks shall be provided at the valves.

(10) Disinfection of facilities:

(a) Following completion of new facilities and repairs to existing facilities, those portions of the facilities which will be in contact with the water delivered to users shall be disinfected with chlorine before they are placed into service. Other disinfectants may be used if it is demonstrated that they can also achieve the same result as chlorine;

(b) Prior to disinfection, the facilities shall be cleaned and flushed with potable water according to AWWA Standards C651 through C654;

(c) For new construction and installation of wells, pumps, and water mains (with any associated service connections and other appurtenances installed at the time of construction), disinfection by chlorination shall be accomplished according to AWWA standards C651 through C654 which includes, but is not limited to the following:

(A) The introduction of a chlorine solution with a free chlorine residual of 25 mg/l into the system in a manner which will result in a thorough wetting of all surfaces and the discharge of all trapped air. The solution shall remain in place for 24 hours.

(B) After the 24-hour period, the free chlorine residual shall be checked, and if it is found to be 10 mg/l or more, the chlorine solution shall be drained and the facility flushed with potable water. If the check measurement taken after the 24-hour contact period indicates a free chlorine residual of less than 10 mg/l, the facilities shall be flushed, rechlorinated and rechecked until a final residual of 10 mg/l or more is achieved after a 24-hour standing time.

(C) After the final residual is confirmed at 10 mg/l or more, and after the facility is flushed and filled with potable water, bacteriological samples shall be taken to provide a record for determining the procedures' effectiveness. A minimum of two consecutive samples must be collected at least 24 hours apart from the new facilities for microbiological analysis. If the results of both analyses indicate that the water is free of coliform organisms, the facility may be put into service. Likewise, if the microbiological analysis indicates the presence of coliform organisms, the flushing and disinfection must be repeated until a sample free of coliform organisms is obtained.

(d) For repaired wells, pumps, and completely depressurized water mains, disinfection by chlorination shall be accomplished according to AWWA standards C651 through C654. Following thorough flushing, a minimum of one sample must be collected from each direction of flow downstream from the repaired facilities for microbiological analysis. If the direction of flow is unknown, then samples shall be taken on each side of the repaired facility. If the microbiological analysis indicates the presence of coliform organisms, a follow-up sample shall be taken. If the follow-up sample indicates a presence of coliform organisms, then the repaired components shall be flushed and resampled until a sample free of coliform organisms is obtained.

(e) For reservoirs and tanks, disinfection by chlorination shall be accomplished according to AWWA Standard C652 which includes, but is not limited to, the following methods:

(A) Filling the reservoir or tank and maintaining a free chlorine residual of not less than 10 mg/l for the appropriate 6 or 24 hour retention period; or

(B) Filling the reservoir or tank with a 50 mg/l chlorine solution and leaving for six hours; or

(C) Directly applying by spraying or brushing a 200 mg/l solution to all surfaces of the storage facility in contact with water if the facility were full to the overflow elevation.

(f) When the procedures described in paragraphs (10)(e)(A) and (B) of this rule are followed, the reservoir or tank shall be drained after the prescribed contact period and refilled with potable water, and a sample taken for microbiological analysis. If the results of the analysis indicate that the water is free of coliform organisms, the facility may be put into service. If not, the procedure shall be repeated until a sample free of coliform organisms is obtained;

(g) When the procedure described in paragraph (10)(e)(C) of this rule is followed, the reservoir or tank shall be filled with potable water and a sample taken for microbiological analysis. It will not be necessary to flush the reservoir or tank after the chlorine solution is applied by spraying or brushing. Microbiological analysis shall indicate that the water is free of coliform organisms before the facility can be put into service;

(h) When a reservoir is chlorinated following routine maintenance, inspection, or repair, it may be put back into service prior to receiving the report on the microbiological analysis provided the water leaving the reservoir has a free chlorine residual of at least 0.4 mg/l or a combined chlorine residual of at least 2.0 mg/l.

(i) Underwater divers used for routine maintenance, inspection, or repair of reservoirs shall use a full body dry suit with hardhat scuba and an external air supply. The diver shall be disinfected by spraying a 200 mg/l solution of chlorine on all surfaces that will come into contact with drinking water.

(j) A water line may be returned to service, following repairs or routine maintenance, prior to receiving a report on the microbiological analysis if the following procedures have been completed.

(A) Customer meters were shut off prior to placing the water line out of service;

(B) The area below the water line to be repaired was excavated and dewatered;

(C) The exposed pipe was treated with a hypochlorite solution;

(D) The water line and any other appurtenance or item affected by the repair and/or maintenance was disinfected by chlorination according to AWWA standards C651 through C654;

(E) The water line was flushed thoroughly, and a concentration of residual chlorine has been re-established that is comparable to the level normally maintained by the water system, if applicable; and

(F) Microbiological analysis has been conducted as a record of repair effectiveness.

# Memo

**City of Troutdale**
**Public Works Department**

**DATE:** May 2, 2014

**TO:** FILE

**FROM:** Steve Gaschler, Public Works Director SG

**RE:** CONSTRUCTION STANDARDS FOR PUBLIC WORKS FACILITIES, MAY 1997: INTERIM CHANGE #23

---

Under the authority provided to me by City Council Resolution No. 1312, the following interim change is made to the "Construction Standards for Public Works Facilities" dated May 1997:

Part VII (Sanitary Sewer – General Comments):

Paragraph 3 is deleted and replaced with the following:

3. The City of Troutdale has received a plan review exemption from the Oregon Department of Environmental Quality for gravity sanitary sewer collection systems.

   a. Gravity sanitary sewer collection system plans are not sent to DEQ for review and the DEQ plan review fee is not applicable. The City will conduct review of gravity sanitary sewer collection system plans and the developer must receive approval by the City prior to commencing construction.

   b. *OAR 340-52 Appendix A, Sewer Pipelines* and the DEQ *Sanitary Sewer Design Notes, September 1994* are hereby incorporated into the City of Troutdale *Construction Standards for Public Works Facilities.* Where these DEQ standards differ from other City-adopted construction standards, the more stringent standard shall apply.

   c. Alternative sewer systems (including septic tank effluent pump/gravity, vacuum and grinder pump), pumping stations, and water pollution control facilities are <u>not</u> exempted and must be submitted to DEQ. Plans in these categories must be initially reviewed and approved by the City. Developer shall provide copies of the City-approved plans and the DEQ plan review fee to the City and the City shall submit the plans and fee to DEQ. Plans must receive DEQ approval prior to commencing construction.

Oregon

John A. Kitzhaber, MD, Governor

Department of Environmental Quality
Northwest Region Portland Office/Water Quality
2020 SW 4th Avenue, Suite 400
Portland, OR 97201-4987
(503) 229-5263
FAX (503) 229-6957
TTY 711

April 30, 2014

Steve Gaschler
Public Works Director
342 SW 4th St
Troutdale, OR 97060

Re: Request for Exemption of Sanitary Sewer Plan Review by DEQ
Troutdale WPCF, File No. 89941, Permit #101044
Multnomah County

On April 21, 2014, a request was received from the Steve Gaschler of the City of Troutdale to exempt the city from DEQ plan review of gravity sanitary sewer plans per OAR 340-052-0045. The City has three professional engineers on staff of which the chief engineer, Travis Hultin PE will bear primary plan review responsibility.

The exemption is granted ONLY for gravity sanitary sewer projects.

Should you have any questions about this letter, please call me at 503-229-5310.

Sincerely,

Michael L. Pinney PE
Senior Environmental Engineer DEQ NWR
Water Quality Source Control Section

Cc: Tiffany Yelton-Bram WQ-NWR
File

# Memo

City of Troutdale
Public Works Department

**DATE:** July 24, 2014

**TO:** FILE

**FROM:** Steve Gaschler, Public Works Director SG

**RE:** CONSTRUCTION STANDARDS FOR PUBLIC WORKS FACILITIES, MAY 1997: INTERIM CHANGE #24 Superseded by IC No. 36

---

Under the authority provided to me by City Council Resolution No. 1312, the following interim change is made to the "Construction Standards for Public Works Facilities" dated May 1997:

1) Sidewalk ramp standard drawings contained in Interim Change #10 (July, 2003) are replaced as follows:

   a) Replace ODOT Drawing RD 755, "Sidewalk Ramp Details" (October 2002), with the current ODOT Drawing RD 755, "Sidewalk Ramp Details" (July 2013).

   b) Replace ODOT Drawing RD 760, "Sidewalk Ramp Placement", with:

      ODOT Drawing RD 756, "Sidewalk Ramp Placement Options Curb Radii<15' "; and

      ODOT Drawing RD 757, "Sidewalk Ramp Placement Options Curb Radii >15' "; and

      ODOT Drawing RD 759, "Truncated Dome Detectable Warning Surface Details & Locations"

# Memo

**City of Troutdale**
**Public Works Department**

**DATE:** October 17, 2016

**TO:** FILE

**FROM:** Steve Gaschler, Public Works Director S.G.

**RE:** CONSTRUCTION STANDARDS FOR PUBLIC WORKS FACILITIES, MAY 1997: INTERIM CHANGE #25 (REVISED)

---

Under the authority provided to me by City Council Resolution No. 1312, the following interim change is made to the "Construction Standards for Public Works Facilities" dated May 1997:

Part V (Storm Sewer Collection – General Requirements)

1) Add the following paragraph: "Stormwater quality treatment shall comply with the 2014 *Stormwater Management Manual* (PSWMM), City of Portland Bureau of Environmental Services."

2) The Presumptive Approach Calculator (PAC) provided by the City of Portland shall not be utilized for stormwater quality facility sizing and design. The PAC is programmed with rainfall data that is specific to the City of Portland and not applicable to Troutdale. Facility sizing and design for stormwater quality treatment systems may utilize the Simplified Approach as allowed in the PSWMM. For designs that are not permitted to utilize the Simplified Approach in the PSWMM, the Performance Approach shall be utilized.

3) Paragraph 3 of Interim Change #15 is rescinded.

This interim change, originally issued on September 20, 2016, is revised to incorporate paragraph 2 above.

C: Travis Hultin, Chief Engineer
Amy Pepper, Civil Engineer
Greg McIntire, Wastewater Superintendent
Chris Damgen, Planning Director

# Memo

**City of Troutdale**
**Public Works Department**

**DATE:** September 20, 2016

**TO:** FILE

**FROM:** Steve Gaschler, Public Works Director SG

**RE:** CONSTRUCTION STANDARDS FOR PUBLIC WORKS FACILITIES, MAY 1997: INTERIM CHANGE #26

---

Under the authority provided to me by City Council Resolution No. 1312, the following interim change is made to the "Construction Standards for Public Works Facilities" dated May 1997:

Part III (Water – General Requirements)

1) Paragraph 24: The list of acceptable equipment for water meters is amended to read as follows:

   Water Meters:

   - ¾" and 1" sizes: Sensus SR II meter
   - 1 ½" and larger sizes: Sensus Omni Compound ($C^2$) meter or Sensus Omni Turbo ($T^2$) meter

   All meters shall have gallon registers.

C: David Schaffer, Water/Streets Superintendent
Travis Hultin, Chief Engineer
Amy Pepper, Civil Engineer

# Memo

**City of Troutdale**
**Public Works Department**

**DATE:** September 20, 2016

**TO:** FILE

**FROM:** Steve Gaschler, Public Works Director SG

**RE:** CONSTRUCTION STANDARDS FOR PUBLIC WORKS FACILITIES, MAY 1997: INTERIM CHANGE #27

---

Under the authority provided to me by City Council Resolution No. 1312, the following interim change is made to the "Construction Standards for Public Works Facilities" dated May 1997:

A. Part III (Water – General Requirements), Paragraph 24: The list of acceptable equipment for water meter boxes is amended to read as follows:

   Meter Boxes: All water meter boxes for ¾", 1", 1 ½", and 2" meters shall be Armorcast Rotocast Polyethylene meter boxes, or approved equal.

   Meter box covers shall be matching Armorcast polyethylene or polymer concrete covers with cast iron hinged reader lids, or approved equal. Meter boxes in driveways or other areas subject to vehicle traffic shall have traffic-rated covers.

B. Part IV (Water Construction Details), Drawing No. IV-7, the meter box reference is amended to read: Armorcast Rotocast Polyethylene Meter Box, or approved equal.

C. Part IV (Water Construction Details), Drawing No. IV-7, Notes 6 and 7 are amended to read: Armorcast Rotocast Polyethylene Meter Box, or approved equal.

D. Interim Change #7 is rescinded.

C: Travis Hultin, Chief Engineer
Amy Pepper, Civil Engineer
David Schaffer, Water/Streets Superintendent

# Memo

**City of Troutdale**
**Public Works Department**

**DATE:** September 20, 2016

**TO:** FILE

**FROM:** Steve Gaschler, Public Works Director SG

**RE:** CONSTRUCTION STANDARDS FOR PUBLIC WORKS FACILITIES, MAY 1997: INTERIM CHANGE #28

---

Under the authority provided to me by City Council Resolution No. 1312, the following interim change is made to the "Construction Standards for Public Works Facilities" dated May 1997:

A. Part I (Streets – General Requirements), add the following paragraphs:

Clustered mailboxes shall be installed in all new subdivisions and partition plats.

Clustered mailboxes within City rights-of-way shall conform to the standards and specifications for such mailboxes contained in the State of Oregon Structural Specialty Code and shall meet the requirements of the Americans with Disabilities Act. Location(s) of clustered mailboxes shall be as directed by the Troutdale Post Master.

C: Travis Hultin, Chief Engineer
Amy Pepper, Civil Engineer
David Schaffer, Water/Streets Superintendent
Chris Damgen, Planning Director
Troutdale Post Master

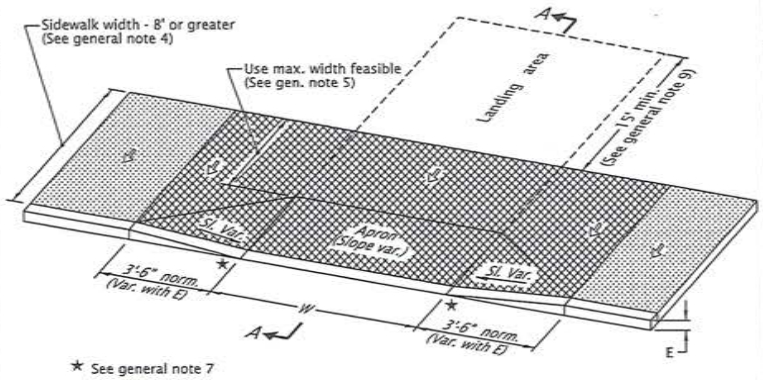


OPTION K
DRIVEWAY IN WIDE (8' OR GREATER) SIDEWALK

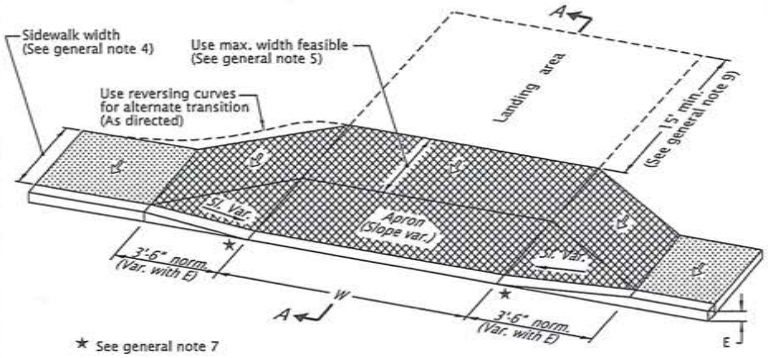


OPTION L
SIDEWALK WRAPPED AROUND DRIVEWAY

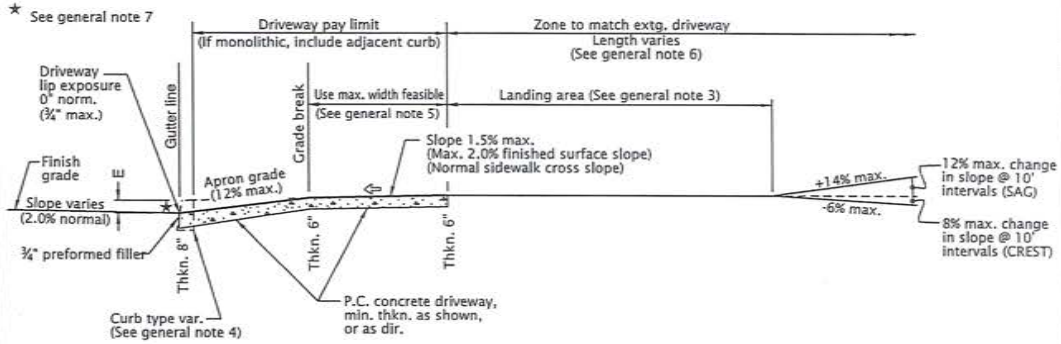


SECTION A-A

GENERAL NOTES FOR ALL DETAILS:

1. Details are based on United States Access Board Standards.
2. Only use details allowed by jurisdiction.
3. The following dimensions are as shown on plans, or as directed: driveway width, driveway slope, sidewalk width, curb exposure, driveway lip exposure, landing area length and width. See project plans for details not shown.
4. Curb, gutter, and sidewalk types varies, see plans.
   See Std. Drgs. RD700 & RD701 for curb details.
   See Std. Drg. RD720 for sidewalk details.
5. 4' unobstructed clear passage with slope 1.5% max. (Max. 2.0% finished surface slope) is required behind driveway apron.
6. Where existing driveway is in good condition, and meets slope requirements, construct only as much as required for satisfactory connection with new work.
7. Check the gutter flow depth at driveway locations to assure that the design flood does not overtop the back of sidewalk at driveway. If overtopping occurs place an inlet at upstream side of driveway or perform other approved design mitigation.
8. Tooled joints are required at all driveway slope break lines.
9. 15' min. of the driveway behind the sidewalk should be surfaced to prevent tracking of gravel onto the sidewalk.
10. Monolithic curb & sidewalk shall retain thickened edge through lowered profile, to accomodate driveway use. See Std. Drg. RD720 for details.
11. Any dimensions except those of general note 5 may be amended by local agencies for their use.

Sidewalk

Driveway pay limit
(If monolithic, include adjacent curb)

⇦ Slope 1.5% max.
(Max. 2.0% finished surface slope)
(Normal sidewalk cross slope)

W Width of driveway

E Curb exposure

NOTE:
This drawing is to be used by local agencies to assist them in the design of driveways on their facilities.

*The selection and use of this Standard Drawing, while designed in accordance with generally accepted engineering principles and practices, is the sole responsibility of the user and should not be used without consulting a Registered Professional Engineer.*

CALC. BOOK NO. N/A

BASELINE REPORT DATE 22-JUL-2016

NOTE: All material and workmanship shall be in accordance with the current Oregon Standard Specifications

OREGON STANDARD DRAWINGS

CURB LINE SIDEWALK DRIVEWAYS
OR ALLEYS (OPTIONS K & L)
LOCAL JURISDICTIONS

2015

| DATE | REVISION DESCRIPTION |
|---|---|
| 01-2015 | REVISED NOTES |
| 07-2015 | REVISED NOTES |
| 01-2016 | REVISED NOTES |
| 07-2016 | REVISED NOTES & GRAPHICS |

RD745

rd745.dgn 22-JUL-2016

RD745

City of Troutdale
Public Works Department

# Memo

**DATE:** September 20, 2016

**TO:** FILE

**FROM:** STEVE GASCHLER, PUBLIC WORKS DIRECTOR SG

**RE:** CONSTRUCTION STANDARDS FOR PUBLIC WORKS FACILITIES, MAY 1997: INTERIM CHANGE NO. 29

---

Under the authority provided to me by City Council Resolution No. 1312, the following interim change is made to the "Construction Standards for Public Works Facilities" date May, 1997:

A. Part I (Streets – General Requirements), add the following paragraphs:

1) Horizontal concrete cutting may performed for the removal of tripping hazards on public sidewalks within City rights-of-way. Horizontal cutting and removal of concrete shall not result in the sidewalk being less than 2" thickness. Sidewalk shall be cut to achieve a 1:12 running slope or flatter, or as otherwise compliant with the "Proposed Guidelines for Pedestrian Facilities in the Public Right-of-Way" published by the United States Access Board (http://www.access-board.gov/guidelines-and-standards/streets-sidewalks/public-rights-of-way/proposed-rights-of-way-guidelines).

2) Sidewalk grinding is prohibited for sidewalks in City rights-of-way, and is distinct from horizontal cutting.

C: Travis Hultin, Chief Engineer
Amy Pepper, Civil Engineer
David Schaffer, Water/Streets Superintendent

City of Troutdale
Public Works Department

# Memo

**DATE:** September 20, 2016

**TO:** FILE

**FROM:** STEVE GASCHLER, PUBLIC WORKS DIRECTOR SG

**RE:** CONSTRUCTION STANDARDS FOR PUBLIC WORKS FACILITIES, MAY 1997: INTERIM CHANGE NO. 30

---

Under the authority provided to me by City Council Resolution No. 1312, the following interim change is made to the "Construction Standards for Public Works Facilities" date May, 1997:

1. Replace ODOT Drawing RD 740, "Separated Sidewalk Driveways or Alleys (Options H, I, & J) Local Jurisdictions with the attached drawing RD 740 (bearing the same title).

2. Replace ODOT Drawing RD 745 and RD 750, "Curb Line Sidewalk Driveways or Alleys (Options K & L) Local Jurisdictions and "Curb Line Sidewalk Driveways or Alleys (Options M & N) Local Jurisdictions with the attached drawings RD 745 and RD 750 (bearing the same title).

3. The following driveway width standards shall apply to all driveway access points onto all City of Troutdale controlled rights-of-way:

| | Width (Dimension "W" on standard details RD 740, 745 & 750) | |
|---|---|---|
| Land Use | Minimum | Maximum |
| Single-Family Residential | 12' | 24' on frontages of less than 50' |
| | | 24' + 1' per 2' of frontage in excess of 50', up to ultimate max driveway width of 36' |
| Multi-family Residential | 12' | 36' |
| Commercial/Industrial | 20' | 40' |

On cul-de-sac bulbs, where irregular lot geometry may not provide necessary frontage to meet the minimum widths indicated above, shared driveway approaches serving two or more lots may be permitted or required.

4. Interim change #19 is rescinded.

C: Travis Hultin, Chief Engineer
Amy Pepper, Civil Engineer
David Schaffer, Water/Streets Superintendent

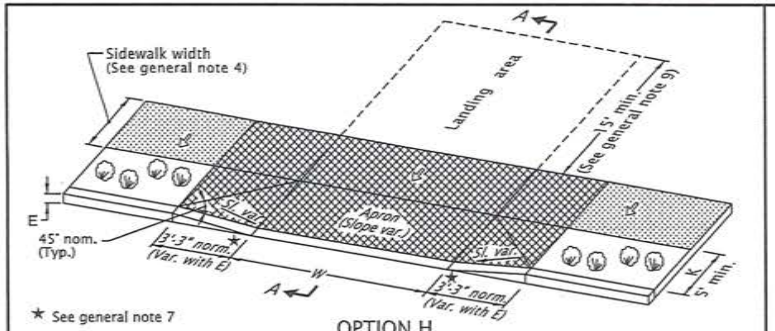


OPTION H
TYPICAL SEPARATED SIDEWALK DRIVEWAY
(Use one of the options below if slope requirements shown in Section A-A cannot be met)

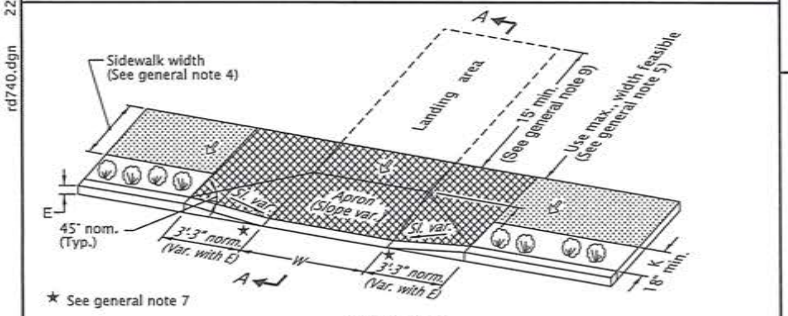


OPTION I
DRIVEWAY ENCROACHES INTO SIDEWALK

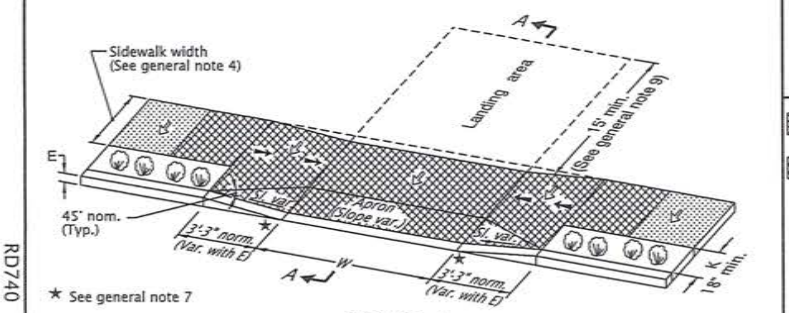


OPTION J
LOWERED SIDEWALK

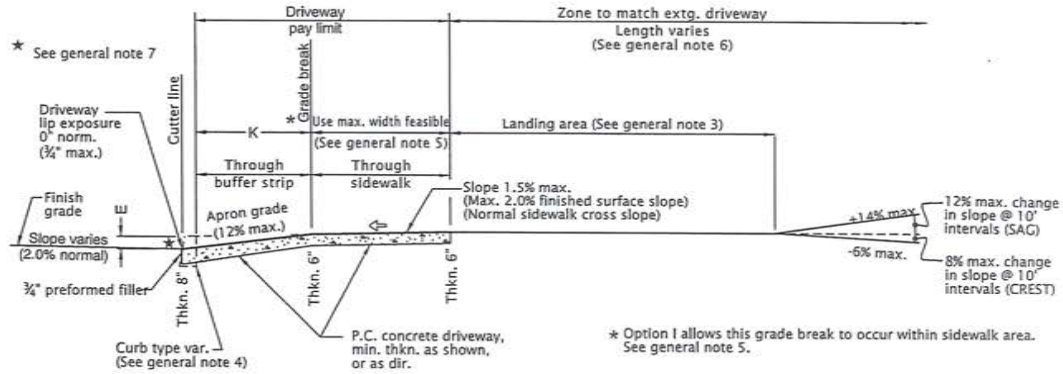


SECTION A-A

GENERAL NOTES FOR ALL DETAILS:

1. Details are based on United States Access Board Standards.
2. Only use details allowed by jurisdiction.
3. The following dimensions are as shown on plans, or as directed: driveway width, driveway slope, sidewalk width, buffer strip width, curb exposure, driveway lip exposure, landing area length and width. See project plans for details not shown.
4. Curb, gutter, and sidewalk types varies, see plans.
   See Std. Drgs. RD700 & RD701 for curb details.
   See Std. Drg. RD720 for sidewalk details.
5. 4' unobstructed clear passage with slope 1.5% max. (Max. 2.0% finished surface slope) is required behind driveway apron.
6. Where existing driveway is in good condition, and meets slope requirements, construct only as much as required for satisfactory connection with new work.
7. Check the gutter flow depth at driveway locations to assure that the design flood does not overtop the back of sidewalk at driveway. If overtopping occurs place an inlet at upstream side of driveway or perform other approved design mitigation.
8. Tooled joints are required at all driveway slope break lines.
9. 15' min. of the driveway behind the sidewalk should be surfaced to prevent tracking of gravel onto the sidewalk.
10. Any dimensions except those of general note 5 may be amended by local agencies for their use.

Sidewalk

Driveway pay limit

⇦ Slope 1.5% max.
(Max. 2.0% finished surface slope)
(Normal sidewalk cross slope)

⬅ Slope 7.5% max.
(Max. 8.3% finished surface slope)
(Ramp length 15' max., measured along finished surface slope)

W Width of driveway
K Buffer strip width
E Curb exposure

NOTE:
This drawing is to be used by local agencies to assist them in the design of driveways on their facilities.

*The selection and use of this Standard Drawing, while designed in accordance with generally accepted engineering principles and practices, is the sole responsibility of the user and should not be used without consulting a Registered Professional Engineer.*

CALC. BOOK NO. N/A

BASELINE REPORT DATE 22-JUL-2016

NOTE: All material and workmanship shall be in accordance with the current Oregon Standard Specifications

OREGON STANDARD DRAWINGS

SEPARATED SIDEWALK DRIVEWAYS OR ALLEYS (OPTIONS H, I & J) LOCAL JURISDICTIONS

2015

| DATE | REVISION DESCRIPTION |
|---|---|
| 01-2015 | REVISED NOTES |
| 07-2015 | REVISED NOTES |
| 01-2016 | REVISED NOTES |
| 07-2016 | REVISED NOTES & GRAPHICS |

22-JUL-2016

rd740.dgn

RD740

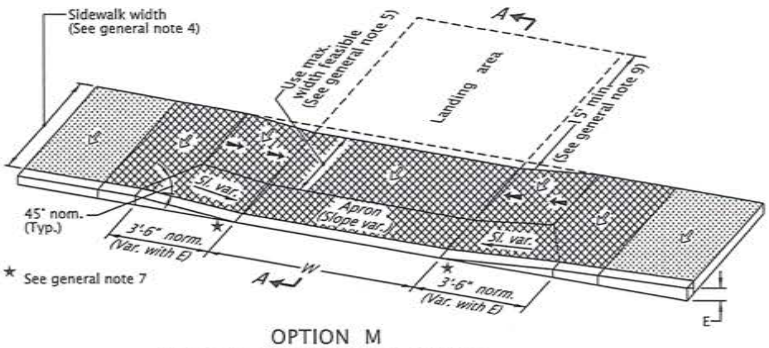


OPTION M
PARTIALLY LOWERED SIDEWALK

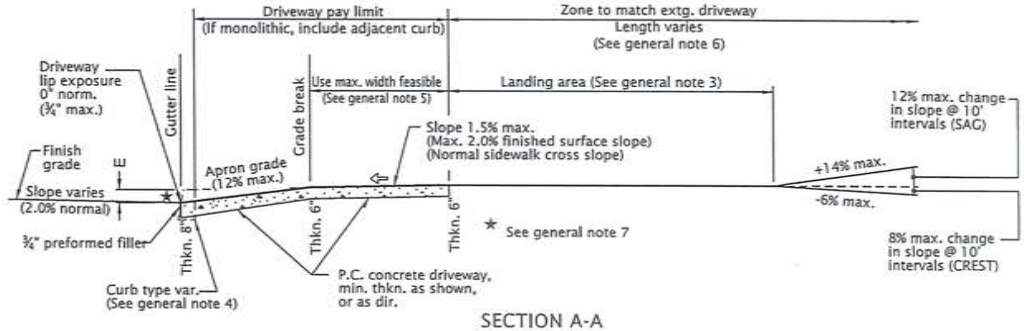


SECTION A-A

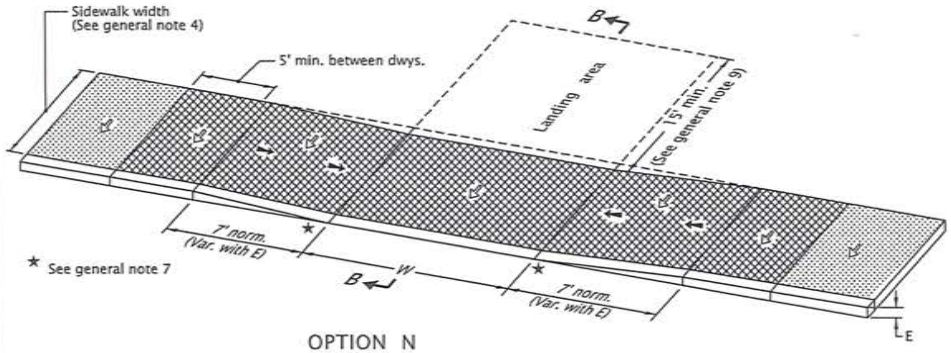


OPTION N
FULLY LOWERED SIDEWALK

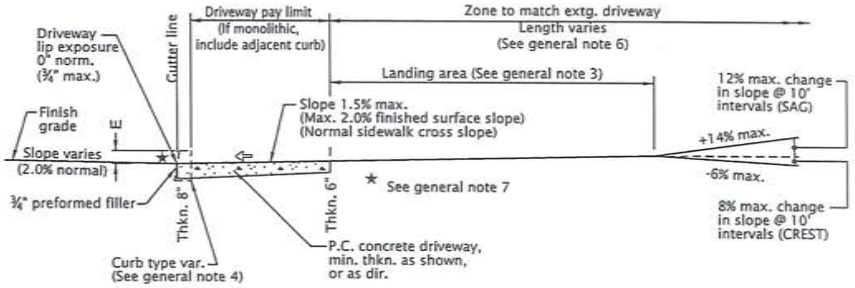


SECTION B-B

GENERAL NOTES FOR ALL DETAILS:

1. Details are based on United States Access Board Standards.
2. Only use details allowed by jurisdiction.
3. The following dimensions are as shown on plans, or as directed: driveway width, driveway slope, sidewalk width, curb exposure, driveway lip exposure, landing area length and width. See project plans for details not shown.
4. Curb, gutter, and sidewalk types varies, see plans.
   See Std. Drgs. RD700 & RD701 for curb details.
   See Std. Drg. RD720 for sidewalk details.
5. 4' unobstructed clear passage with slope 1.5% max. (Max. 2.0% finished surface slope) is required behind driveway apron.
6. Where existing driveway is in good condition, and meets slope requirements, construct only as much as required for satisfactory connection with new work.
7. Check the gutter flow depth at driveway locations to assure that the design flood does not overtop the back of sidewalk at driveway. If overtopping occurs place an inlet at upstream side of driveway or perform other approved design mitigation.
8. Tooled joints are required at all driveway slope break lines.
9. 15' min. of the driveway behind the sidewalk should be surfaced to prevent tracking of gravel onto the sidewalk.
10. Monolithic curb & sidewalk shall retain thickened edge through lowered profile, to accomodate driveway use. See Std. Drg. RD720 for details.
11. Any dimensions except those of general note 5 may be amended by local agencies for their use.

Sidewalk

Driveway pay limit (If monolithic, include adjacent curb)

⇦ Slope 1.5% max. (Max. 2.0% finished surface slope) (Normal sidewalk cross slope)

⬅ Slope 7.5% max. (Max. 8.3% finished surface slope) (Ramp length 15' max., measured along finished surface slope)

W Width of driveway

Curb exposure

NOTE:
This drawing is to be used by local agencies to assist them in the design of driveways on their facilities.

CALC. BOOK NO. N/A

BASELINE REPORT DATE 22-JUL-2016

NOTE: All material and workmanship shall be in accordance with the current Oregon Standard Specifications

*The selection and use of this Standard Drawing, while designed in accordance with generally accepted engineering principles and practices, is the sole responsibility of the user and should not be used without consulting a Registered Professional Engineer.*

OREGON STANDARD DRAWINGS

CURB LINE SIDEWALK DRIVEWAYS OR ALLEYS (OPTIONS M & N) LOCAL JURISDICTIONS

2015

| DATE | REVISION DESCRIPTION |
|---|---|
| 01-2015 | REVISED NOTES |
| 07-2015 | REVISED NOTES |
| 01-2016 | REVISED NOTES |
| 07-2016 | REVISED NOTES & GRAPHICS |

22-JUL-2016

rd750.dgn

RD750

# Memo

**City of Troutdale**
**Public Works Department**

**DATE:** **September 20, 2016**

**TO:** **FILE**

**FROM:** **Steve Gaschler, Public Works Director** SG

**RE:** **CONSTRUCTION STANDARDS FOR PUBLIC WORKS FACILITIES, MAY 1997: INTERIM CHANGE #31**

---

Under the authority provided to me by City Council Resolution No. 1312, the following interim change is made to the "Construction Standards for Public Works Facilities" dated May 1997:

A. Part II (Streets – Construction Details)

Replace Standard Drawing II-25 (14' Wide Speed Hump) with the revised Standard Drawing II-25 bearing the same title, attached.

C: Travis Hultin, Chief Engineer
Amy Pepper, Civil Engineer
David Schaffer, Water/Streets Superintendent

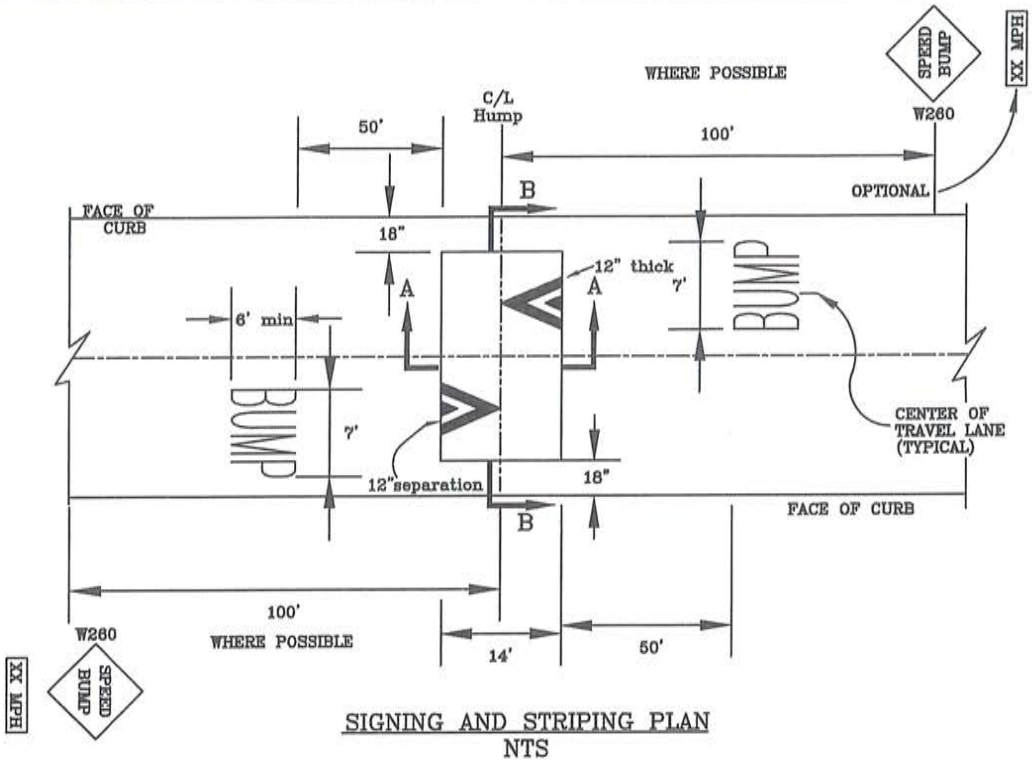


SIGNING AND STRIPING PLAN
NTS

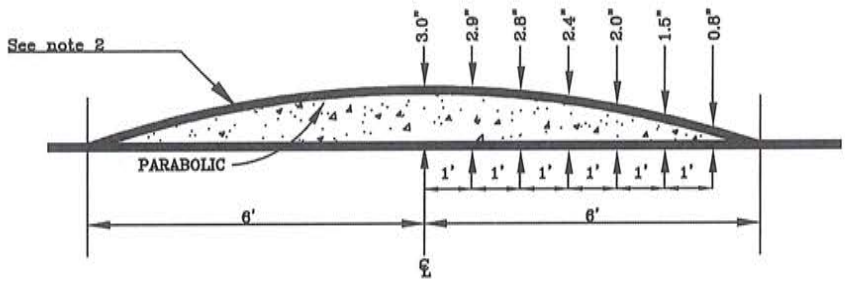


SECTION A–A
NTS

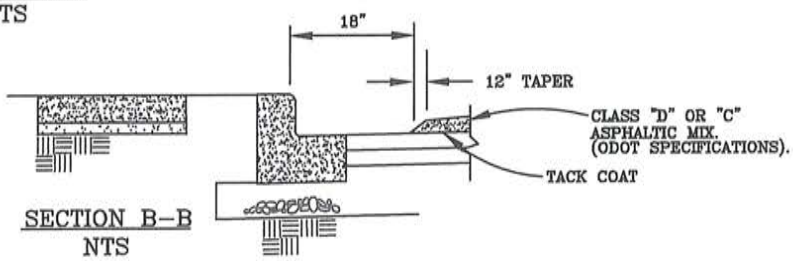


SECTION B–B
NTS

GENERAL NOTES

1. SPEED HUMPS SHOULD BE SPACED ACCORDING TO AN ENGINEERING EVALUATION OF THE PHYSICAL STREET SECTION AS WELL AS TRAFFIC OPERATIONS DATA. TYPICALLY, SPEED HUMPS SHOULD BE SPACED BETWEEN 300 AND 600 FEET.
2. ALL SPEEDHUMPS MUST BE FORMED WITH A PRE-MADE TEMPLATE TO ENSURE CONSISTENCY OF CONSTRUCTION FOR DEPTH AND SHAPE. TEMPLATE MUST BE INSPECTED BY CITY FORCES BEFORE PLACEMENT OF HUMPS.
3. AMBIENT TEMPERATURE MUST BE NO LESS THAN 55 DEG. F. DURING PLACEMENT OF HUMPS.
3. WHERE A SERIES OF SPEED HUMPS EXIST IN CLOSE PROXIMITY, THE ADVISORY SPEED PLAQUE MAY BE ELIMINATED ON ALL BUT THE FIRST SPEED HUMP IN THE SERIES, WITH THE APPROVAL OF THE CITY

CITY OF TROUTDALE

*14' WIDE SPEED HUMP*

| DATE: | DRAWING NO. |
|---|---|
| UPDATED 2016 | II–25 |

FILENAME: APWA0132.DWG

# Memo

**City of Troutdale**
**Public Works Department**

**DATE:** March 15, 2017

**TO:** FILE

**FROM:** Steve Gaschler, Public Works Director S.G. 3-16-17

**RE:** CONSTRUCTION STANDARDS FOR PUBLIC WORKS FACILITIES, MAY 1997: INTERIM CHANGE #32

---

Under the authority provided to me by City Council Resolution No. 1312, the following interim change is made to the "Construction Standards for Public Works Facilities" dated May 1997:

A. Part III (Water – General Requirements), Paragraph 24: The following specification is added:

Meter boxes for all ¾" and 1" service laterals shall be sized for 1" meters

Make: Armorcast Rotocast Polyethylene

Part#: P6000485

Nominal Dimensions: 12"X20"X12"

Travis Hultin, Chief Engineer

C: David Schaffer, Water/Streets Superintendent

Erik Henricksen, Engineering Tech

City of Troutdale
Public Works Department

# Memo

**DATE:** August 1, 2017

**TO:** FILE

**FROM:** STEVE GASCHLER, PUBLIC WORKS DIRECTOR SG

**RE:** CONSTRUCTION STANDARDS FOR PUBLIC WORKS FACILITIES, MAY 1997: INTERIM CHANGE NO. 33

---

Under the authority provided to me by City Council Resolution No. 1312, the following interim change is made to the "Construction Standards for Public Works Facilities" date May, 1997:

1. Residential driveways and sidewalk sections through driveways shall have a nominal thickness of 6" of 3300 PSI concrete @ 28 days on no less than 2 inches thick (compacted depth), ¾"– 0 or 1"-0 well-graded crushed rock.

2. Commercial and industrial driveways and sidewalk sections through driveways shall have a nominal thickness of 8" of 3300 PSI concrete @ 28 days on no less than 4 inches thick (compacted depth), ¾"– 0 minus or 1"-0 well-graded crushed rock.

C: Travis Hultin, Chief Engineer
Zaldy Macalanda, Civil Engineer
Erik Henricksen, Engineering Associate
Nick Massey, Engineering Technician
David Schaffer, Water/Streets Superintendent

City of Troutdale
Public Works Department

# Memo

**DATE:** August 30, 2017

**TO:** FILE

**FROM:** STEVE GASCHLER, PUBLIC WORKS DIRECTOR S.G.

**RE:** CONSTRUCTION STANDARDS FOR PUBLIC WORKS FACILITIES, MAY 1997: INTERIM CHANGE NO. 34 – EROSION CONTROL STANDARDS

---

Under the authority provided to me by City Council Resolution No. 1312, the following interim change is made to the "Construction Standards for Public Works Facilities" date May, 1997:

1. An erosion and sediment control plan (ESCP) and permit shall be required and approved by the Director, or Director's representative:

    a. Prior to any grubbing, excavation, mining, dredging, paving, filling, or grading that disturbs an area of 1,000 square feet or greater outside of the vegetation corridor and slope district or flood hazard area; or

    b. Prior to any grubbing, excavation, mining, dredging, paving, filling, or grading on sites within the vegetation corridor and slope district or flood hazard areas; or

    c. Upon a finding that visible or measurable erosion has entered, or is likely to enter, the public storm and surface water system.

2. Sites requiring an ESCP and erosion control permit involving disturbance of an area less than 1 acre must obtain a Site Development Permit for erosion control.

3. Sites requiring an ESCP and erosion control permit involving disturbance of an area greater than 1 acre must obtain an NPDES 1200-C Permit for erosion control. See http://www.oregon.gov/deq/wq/wqpermits/Pages/Stormwater-Construction.aspx

4. The current edition of the Oregon Department of Environmental Quality *Construction Stormwater Best Management Practices Manual* shall be the primary guide in establishing and reviewing erosion control techniques, methods, and requirements. See http://www.oregon.gov/deq/FilterPermitsDocs/BMPManual.pdf .

5. The duration of exposure of soils shall be minimized during construction. Exposed soils and stockpiles shall be covered by mulch, erosion control blankets, sheeting, temporary seeding, or

other suitable material following grading or construction, until soils are permanently stabilized with final vegetation or other approved permanent cover. During the wet season (Nov 1-April 30), disturbed areas and stockpiles that will remain unworked for seven consecutive calendar days shall be temporarily covered as provided above. At all other times of year, disturbed areas and stockpiles that will remain unworked for twenty one consecutive calendar days shall be temporarily covered as provided above.

6. Exemptions:

   a. Farming activities as defined in ORS 30.930 and farm uses defined in ORS 215.203, except construction or reconstruction of buildings on the site associated with farm practices, are exempt from the ESCP and permit requirements of this standard, provided that the specific subject land area has been cultivated within the last three years.

7. When an ESCP and erosion control permit are not required under this standard, any person creating ground disturbance within the City is nonetheless responsible for preventing dirt, mud, sand, clay, stone, gravel, bark mulch or similar material to be moved by the action of water from said property, or to be otherwise placed into or upon the public right-of-way, which shall include public streets, public sidewalks, and public storm or sanitary sewer systems, in accordance with Troutdale Municipal Code 12.09.

C: Travis Hultin, Chief Engineer
Ryan Largura, Environmental Specialist
Zaldy Macalanda, Civil Engineer
Erik Henricksen, Engineering Associate
Nick Massey, Engineering Technician

City of Troutdale
Public Works Department

# Memo

**DATE:** November 16, 2017

**TO:** FILE

**FROM:** TRAVIS HULTIN, DEPUTY PW DIRECTOR/CHIEF ENGINEER TH

**RE:** *REVISED* CONSTRUCTION STANDARDS FOR PUBLIC WORKS FACILITIES, MAY 1997: INTERIM CHANGE NO. 35 – STORMWATER QUALITY TREATMENT REQUIREMENTS

---

Under the authority provided to the Public Works Director by City Council Resolution No. 1312, and delegated to me by the Public Works Director, the following interim change is made to the "Construction Standards for Public Works Facilities" date May, 1997:

1. Applicability - Water quality treatment for stormwater is required for any/all of the following:
    a. The site contains vegetation corridor established in Chapter 4.300 Vegetation Corridor and Slope District (VECO) of the Troutdale Development Code (TDC); abuts or drains directly to a protected water feature as defined by the TDC; or the site drains to, or is within, the Flood Management Area established in chapter 4.500 of the TDC.
    b. The development involves fuel storage or dispensing areas, outdoor vehicle wash areas, or outdoor vehicle maintenance areas.
    c. The development includes the development or redevelopment of 2,000 square feet or more of uncovered impervious area. Pavement overlays of existing paved surfaces shall not be considered redevelopment for the purpose of this standard. Removal and replacement of paved surfaces shall be considered redevelopment for the purpose of this standard.
    d. The Public Works Director, or designee, determines that the development has other characteristics that may degrade stormwater quality if water quality treatment is not provided.
2. For development meeting the applicability criteria provided above, the developer shall submit a conceptual Stormwater Management Report with the Land Use Application, providing a qualitative description of the proposed approach to meeting the requirements of these stormwater quality standards; and shall submit a detailed Stormwater Management Report

with the building or plumbing permit application (whichever occurs first) providing a detailed description of the stormwater quality design including supporting calculations, drawings and reference materials. The Stormwater Management Report shall be prepared and sealed by a professional engineer licensed in the State of Oregon, and shall include a statement from the engineer certifying that the design of the water quality facilities meets or exceeds the requirements of these standards.

3. Design Standards - Water quality facilities for stormwater management, when required, shall be designed, constructed, and sited by the developer to ensure that stormwater runoff is treated onsite prior to discharge into public storm drainage systems, public rights-of-way, other private properties, and/or any protected water feature.

   a. Stormwater quality treatment shall comply with the 2016 *Stormwater Management Manual* (PSWMM) and 2016 *Source Control Manual,* City of Portland Bureau of Environmental Services.

      i. The Presumptive Approach Calculator (PAC) provided by the City of Portland shall not be utilized for stormwater quality facility sizing and design. The PAC is programmed with rainfall data that is specific to the City of Portland and not applicable to Troutdale. Facility sizing and design for stormwater quality treatment systems may utilize the Simplified Approach as allowed in the PSWMM. For designs that are not permitted to utilize the Simplified Approach in the PSWMM, the Performance Approach shall be utilized.

   b. Vegetated stormwater quality facilities may be located within the vegetation corridor as defined by the TDC provided that only native vegetation shall be used.

   c. A vegetated stormwater quality facility may be constructed within the 100-year flood plain provided that:

      i. The Base Flood Elevation is established for areas of Special Flood Hazard Area Zone A.

      ii. The stormwater quality facility is outside the area covered by the 25-year flood event.

      iii. The stormwater quality facility is not within a defined floodway.

      iv. The stormwater quality facility is planted with native plant species.

      v. The design of the water quality facility complies with applicable federal standards of the National Flood Insurance Program.

   d. Where it is determined by the Director of Public Works, or designee, that a more efficient and effective regional stormwater quality facility site exists to serve multiple properties in the sub-basin, the stormwater quality facility may be constructed offsite to accommodate anticipated development at the intensity and density of the underlying zoning districts of the properties to be served.

   e. Stormwater quality design shall provide for source control of pollution, treatment of stormwater runoff, prevention of stream bank erosion, and prevention of wetland impacts/degradation.

4. When a stormwater quality facility is constructed or modified, an operation and maintenance plan for the facility shall be required. The operation and maintenance plan shall meet the requirements and guidelines specified by the Public Works Department.

5. If a stormwater quality facility is dedicated to the City, all deficiencies in design, workmanship, and materials shall be the responsibility of the developer for two years following acceptance of the dedication by the City. If the facility is not dedicated to the City, and remains in private ownership, operation and maintenance of the facility shall be the continuing responsibility of the owner.

6. All plumbing work associated with stormwater quality facilities on private property is additionally subject to the requirements of the Plumbing Code.

7. Uses that include certain industrial activities require an NPDES 1200-Z permit issued by the Oregon Department of Environmental Quality (DEQ). It is the responsibility of industrial property owners and developers to consult with DEQ to determine if an NPDES 1200-Z permit is required for their site/facility, and to obtain such permit through DEQ when required. Owners/developers are not required to provide verification of such consultations or determinations to the City, save that if a 1200-Z permit is obtained, the owner or developer shall provide a copy of the issued permit to the City.

   More information on NPDES 1200-Z permits, including applicability of NPDES 1200-Z permits and contact information for DEQ, is available at https://www.oregon.gov/deq/wq/wqpermits/Pages/Stormwater-Industrial.aspx .

   If a conflict exists between a requirements of these standards and a requirement of an NPDES 1200-Z permit, the more stringent requirement shall apply.

8. These standards are for the provision of stormwater quality treatment. Requirements for stormwater quantity control (e.g. detention, flow-control) are separate and additional to these standards.

This interim change was originally issued on August 31, 2017. This revision modifies section 7 above to remove the requirement of owners and developers to provide written DEQ verification of NPDES 1200-Z consultations and determinations pursuant to updated guidance provided by Oregon DEQ.

C: Steve Gaschler, Chief Engineer
Greg McIntire, Wastewater Superintendent
Ryan Largura, Environmental Specialist
Zaldy Macalanda, Civil Engineer
Erik Henricksen, Engineering Associate
Nick Massey, Engineering Technician

# CITY OF TROUTDALE

## MEMO - Engineering Division

Date: April 2, 2019
From: Travis Hultin, Deputy PW Director/Chief Engineer TH
To: File

**Subject: CONSTRUCTION STANDARDS FOR PUBLIC WORKS FACILITIES, MAY 1997: INTERIM CHANGE NO. 36 – Sidewalk Ramps**

Under the authority provided to the Public Works Director by City Council Resolution No. 1312, and delegated to me by the Public Works Director, the following interim change is made to the "Construction Standards for Public Works Facilities" dated May, 1997:

1. Sidewalk ramp drawings specified in Interim Change #24 (July 2014) are replaced as follows:

    a. Replace ODOT Drawing RD 755, "Sidewalk Ramp Details" (July 2013) with ODOT Drawing RD 755, "Curb Ramp Details", revised January, 2019 (attached).

    b. Replace ODOT Drawing RD 756, "Sidewalk Ramp Placement Options, Curb Radii ≤ 15'" (July 2013) with ODOT Drawing RD 756, "Curb Ramp Layout Options Small Radii", revised January 2019 (attached).

    c. Replace ODOT Drawing RD 757, "Sidewalk Ramp Placement Options, Curb Radii ≥ 15'" (July 2013) with ODOT Drawing RD 757, "Curb Ramp Layout Options Large Radii", revised January 2019 (attached).

    d. Replace ODOT Drawing RD 759, "Truncated Dome Detectable Warning Surface Details and Locations" (July 2013) with ODOT Drawings 758, "Detectable Warning Surface Details and Placement Locations", revised January 2019 (attached), and 759, "Detectable Warning Surface Details and Placement Locations", revised January 2019 (attached).

2. Interim Changes #10 and #24 are superseded by this interim change and are obsolete.

C: Fred Ostler, Public Works Director
David Schaffer, Streets Superintendent
Zaldy Macalanda, Civil Engineer
Nick Massey, Engineering Associate
Christopher Priano, Engineering Technician

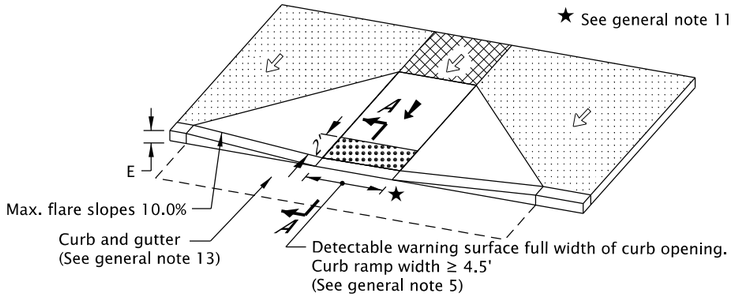


## PERPENDICULAR CURB RAMP DETAIL

(Use "Parallel Curb Ramp Detail" or "Combination Curb Ramp Detail" when reqd. turning space cannot be obtained)

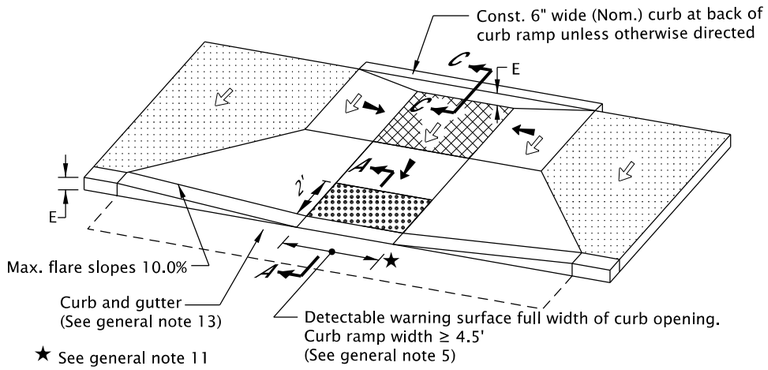


## COMBINATION CURB RAMP DETAIL

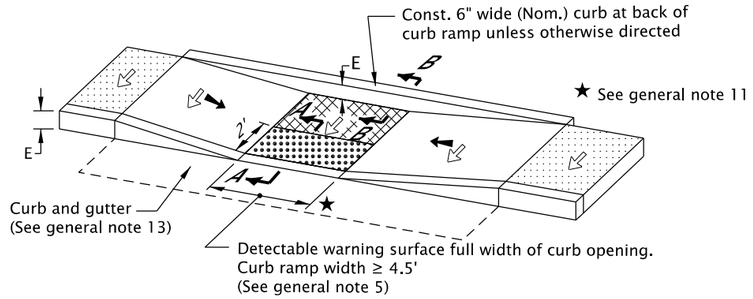


## PARALLEL CURB RAMP DETAIL

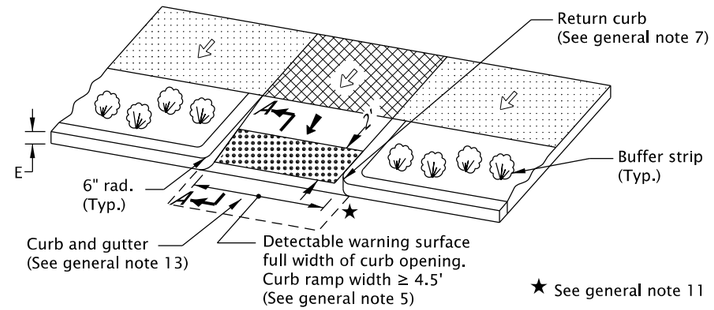


## PERPENDICULAR CURB RAMP DETAIL (THROUGH BUFFER STRIP)

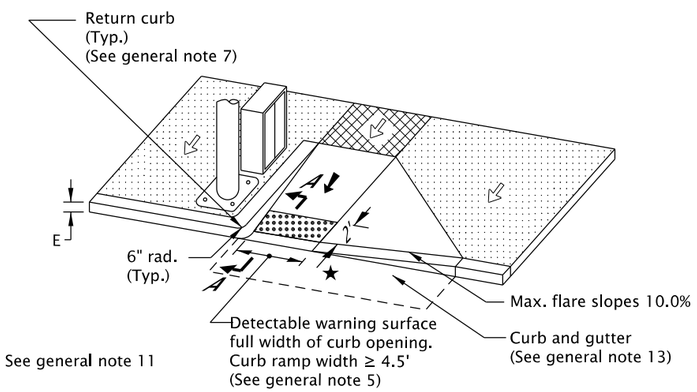


## PERPENDICULAR CURB RAMP DETAIL (WITH SINGLE FLARE)

(Use "Parallel Curb Ramp Detail" or "Combination Curb Ramp Detail" when reqd. turning space cannot be obtained)

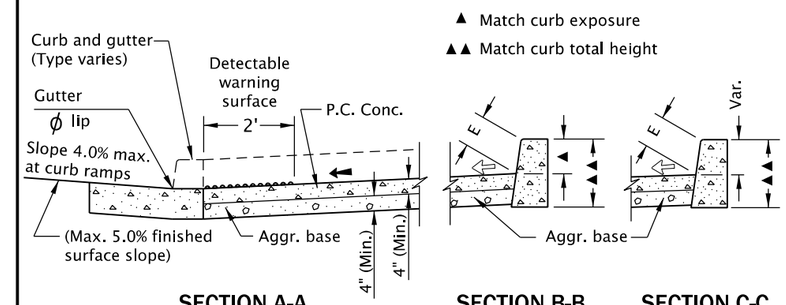


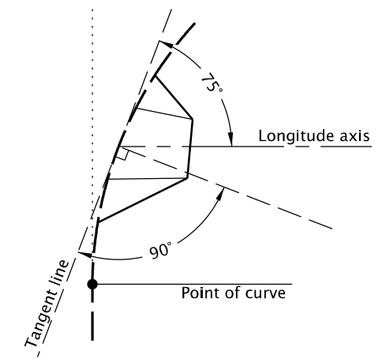


## PERPENDICULAR CURB RAMP DIAGRAM

(See general note 8)

Sidewalk

Turning space
When not constrained 4.5' x 4.5' (4' x 4' min. finished surface).
When constrained 4.5' x 5.5' (4' x 5' min. finished surface with longer dimension in direction of pedestrian street crossing).
For the purposes of this application, a max. 2.0% finished surface slope (for drainage) is considered level.

Detectable warning surface

Slope 1.5% max. (Max. 2.0% finished surface slope)
(Normal sidewalk cross slope)

Slope 7.5% max. (Max. 8.3% finished surface slope)

GENERAL NOTES FOR ALL DETAILS ON THIS SHEET:

1. Curb ramp details are based on ODOT applicable standards.
2. See Std. Dwgs. RD700 & RD701 for curbs. See Std. Dwg. RD720 for sidewalks. See Std. Dwgs. TM503 & TM530 for crosswalk markings, widths, etc.
3. Tooled joints are required at all curb ramp grade break lines.
4. Curb ramp slopes shown are relative to the true level horizon (Zero bubble).
5. Place detectable warning surface at the back of curb for a minimum depth of 2' at curb ramp that is adjacent to traffic. For details not shown, see Std. Dwgs. RD758 & RD759.
6. Grade breaks at the top and bottom of curb ramp runs shall be perpendicular to the direction of the ramp run. Grade breaks shall not be permitted on the surface of ramp runs and turning spaces. Surface slopes that meet at grade breaks shall be flush.
7. Return curb may be provided in lieu of flared slope only if protected from traverse by landscaping or fixed barrier. Return curb shall not reduce width of approaching sidewalk.
8. For the purpose of this drawing, a curb ramp is considered "perpendicular" if the angle between the longitudinal axis of the curb ramp and a line tangent to the curb at the curb ramp center is 75° to 90°.
9. Curb ramps for paths intersecting a roadway should be full width of path, excluding flares. When a curb ramp is used to provide bicycle access from a roadway to a sidewalk, the curb ramp should be 8' wide.
10. For curb ramp placement options, see Std. Dwgs. RD756 & RD757.
11. Check the gutter flow depth at curb ramp locations to assure that the design flood does not overtop the back of sidewalk at curb ramp. Place an inlet at upstream side of curb ramp or perform other approved design mitigation.
12. Site conditions normally require a project specific design. See project plans for details not shown.
13. On or along state highways, curb and gutter is required at curb ramps.

CALC. BOOK NO. N/A

BASELINE REPORT DATE 16-JAN-2019

NOTE: All material and workmanship shall be in accordance with the current Oregon Standard Specifications

*The selection and use of this Standard Drawing, while designed in accordance with generally accepted engineering principles and practices, is the sole responsibility of the user and should not be used without consulting a Registered Professional Engineer.*

**OREGON STANDARD DRAWINGS**

**CURB RAMP DETAILS**

2018

| DATE | REVISION DESCRIPTION |
|---|---|
| 01-2018 | REVISED DETAILS, REVISED & ADDED NOTES |
| 07-2018 | REVISED DETAILS, REVISED & ADDED NOTES |
| 01-2019 | REVISED DETAIL & ADDED DIAGRAM |

rd755.dgn 16-JAN-2019

RD755

Effective Date: June 1, 2019 - November 30, 2019

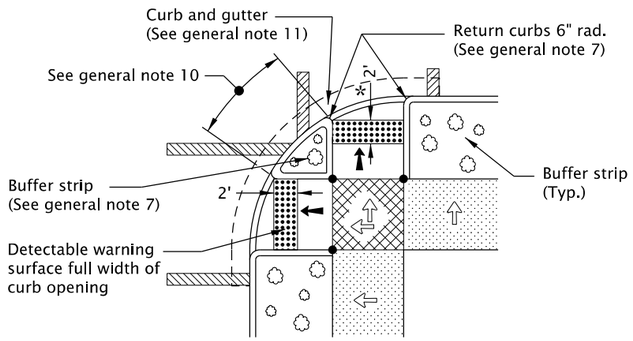


## CURB RAMPS WITH LANDSCAPED BUFFER STRIP

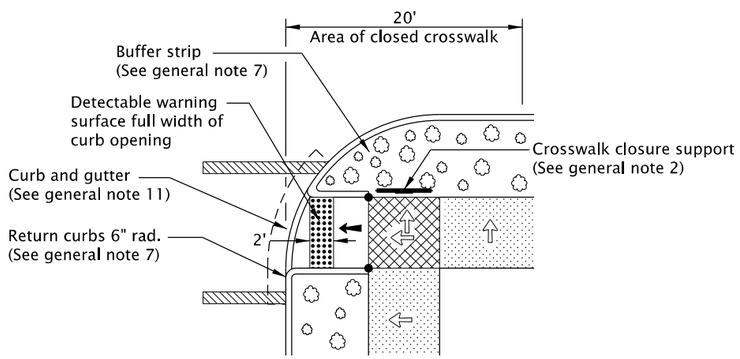


## CURB RAMPS WITH CROSSWALK CLOSURE

## OPTION "A"

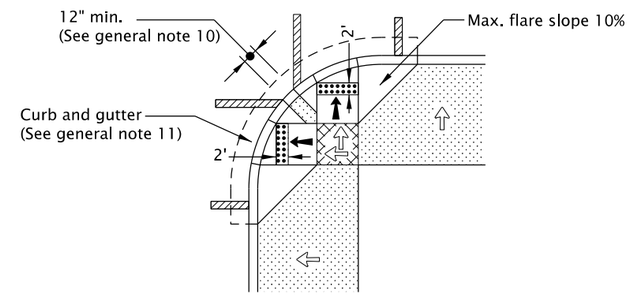


## CURB RAMPS FOR WIDE SIDEWALKS

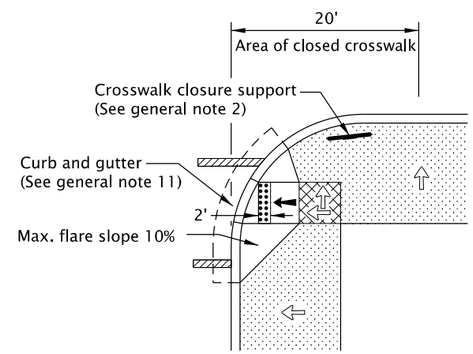


## CURB RAMPS WITH CROSSWALK CLOSURE

## OPTION "B"

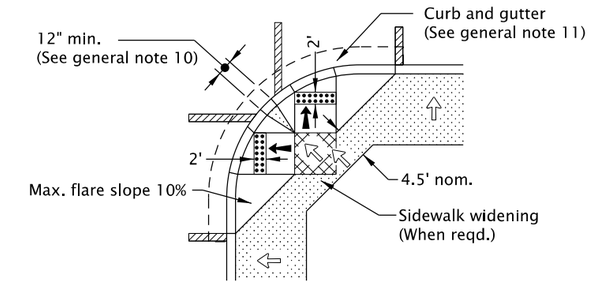


## CURB RAMPS FOR NARROW SIDEWALKS

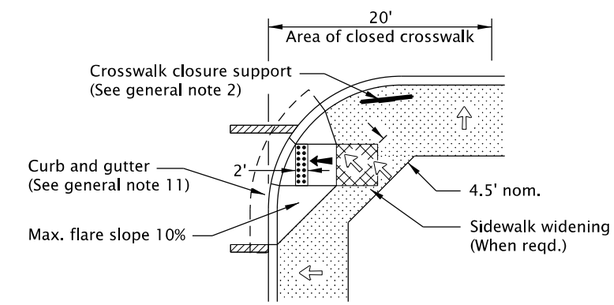


## CURB RAMPS WITH CROSSWALK CLOSURE

## OPTION "C"

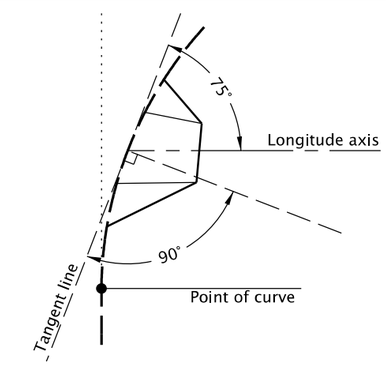


## PERPENDICULAR CURB RAMP DIAGRAM

(See general note 8 )

Marked or intended crossing location

Sidewalk

Detectable warning surface

Turning space
When not constrained 4.5' x 4.5' (4' x 4' min. finished surface).
When constrained 4.5' x 5.5' (4' x 5' min. finished surface with longer dimension in direction of pedestrian street crossing).
For the purposes of this application, a max. 2.0% finished surface slope (for drainage) is considered level.

Slope 1.5% max.
(Max. 2.0% finished surface slope)
(Normal sidewalk cross slope)

Slope 7.5% max.
(Max. 8.3% finished surface slope)

Zero curb exposure

GENERAL NOTES FOR ALL DETAILS ON THIS SHEET:

1. Curb ramp details are based on ODOT applicable standards.
2. See project plans for details not shown.
   See Std. Dwgs. RD700 & RD701 for curbs.
   See Std. Dwg. RD720 for sidewalks.
   See Std. Dwgs. TM503 & TM530 for crosswalk marking, widths, etc.
   See Std. Dwg. RD755 for curb ramp details.
   See Std. Dwg. TM240 for crosswalk closure detail.
   See Traffic Standard Drawings for signal pole and pedestrian pedestal details.
3. Tooled joints are required at all curb ramp grade break lines.
4. Curb ramp slopes shown are relative to the true level horizon (Zero bubble).
5. Place detectable warning surface at the back of curb for a minimum depth of 2' at curb ramp that is adjacent to traffic. For details not shown, see Std. Dwgs. RD758 & RD759.
6. Check the gutter flow depth to assure that the design flood does not overtop the back of sidewalk. Place an inlet at upstream side or perform other approved design mitigation.
7. Return curb may be provided in lieu of flared slope only if protected from traverse by landscaping or fixed barrier. Return curb shall not reduce width of approaching sidewalk.
8. For the purpose of this drawing, a curb ramp is considered "perpendicular" if the angle between the longitudinal axis of the curb ramp and a line tangent to the curb at the curb ramp center is 75° to 90°.
9. Curb ramps for paths intersecting a roadway should be full width of path, excluding flares. When a curb ramp is used to provide bicycle access from a roadway to a sidewalk, the curb ramp should be 8' wide.
10. When 2 curb ramps are immediately adjacent as in Options B & C, the curb exposure (E) between the adjacent side flares may range between 3" and full design exposure.
11. On or along state highways, curb and gutter is required at curb ramps.
12. Grade breaks at the top and bottom of curb ramp runs shall be perpendicular to the direction of the ramp run. Grade breaks shall not be permitted on the surface of ramp runs and turning spaces. Surface slopes that meet at grade breaks shall be flush.

CALC. BOOK NO. N/A

BASELINE REPORT DATE 16-JAN-2019

NOTE: All material and workmanship shall be in accordance with the current Oregon Standard Specifications

*The selection and use of this Standard Drawing, while designed in accordance with generally accepted engineering principles and practices, is the sole responsibility of the user and should not be used without consulting a Registered Professional Engineer.*

**OREGON STANDARD DRAWINGS**

**CURB RAMP LAYOUT OPTIONS SMALL RADII**

2018

| DATE | REVISION DESCRIPTION |
|---|---|
| 01-2018 | REVISED DETAILS, REVISED & ADDED NOTES |
| 07-2018 | REVISED DETAIL & NOTES |
| 01-2019 | ADDED DIAGRAM DETAIL, REVISED DETAILS & NOTES |

rd756.dgn 16-JAN-2019

RD756

Effective Date: June 1, 2019 - November 30, 2019

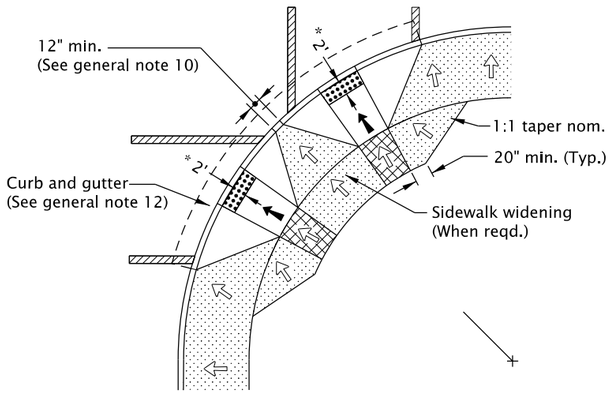


**CURB RAMPS FOR NARROW SIDEWALKS**

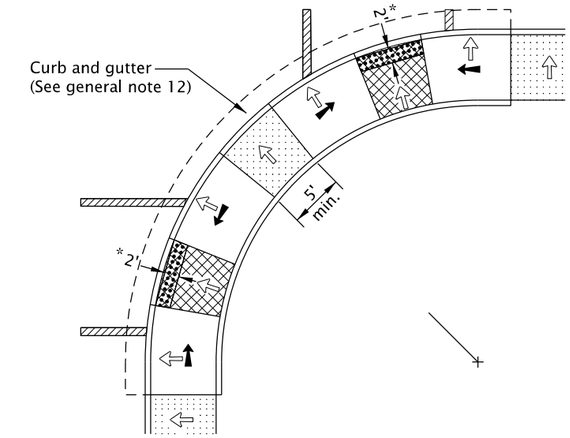


**CURB RAMPS FOR NARROW SIDEWALKS**

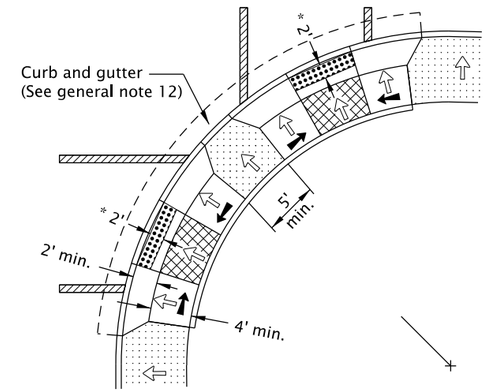


**CURB RAMPS FOR WIDE SIDEWALKS**

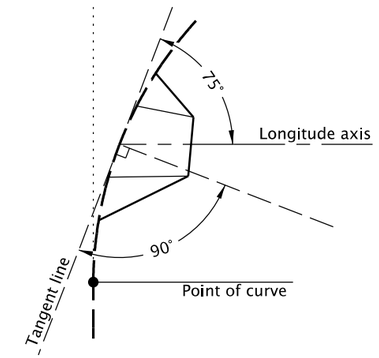


**PERPENDICULAR CURB RAMP DIAGRAM**
(See general note 8 )

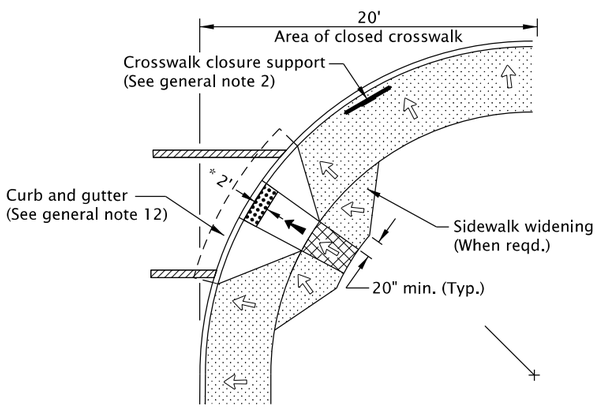


**CURB RAMPS FOR NARROW SIDEWALKS**
**OPTION "G"**

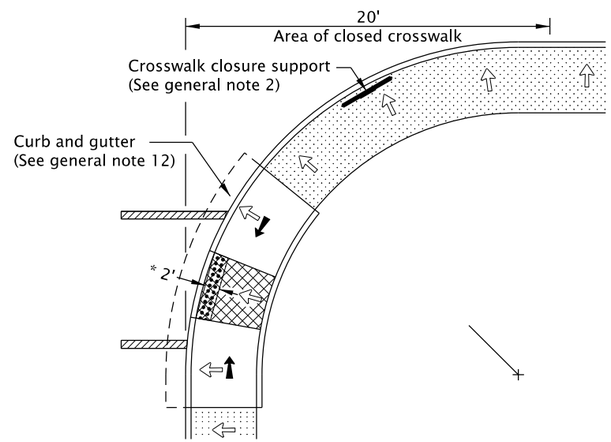


**CURB RAMPS WITH CROSSWALK CLOSURE**
**OPTION "H"**

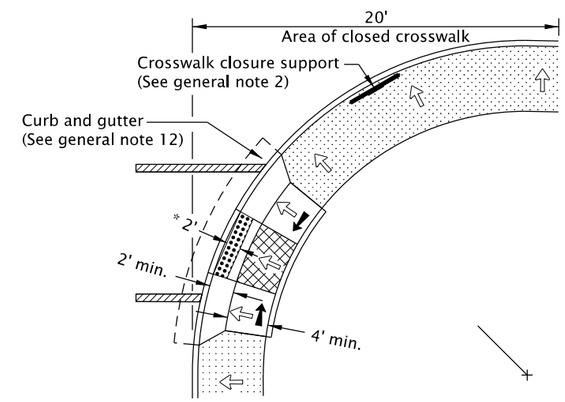


**CURB RAMPS WITH CROSSWALK CLOSURE**
**OPTION "I"**

Marked or intended crossing location

Sidewalk

Detectable warning surface

Turning space
When not constrained 4.5' x 4.5' (4' x 4' min. finished surface).
When constrained 4.5' x 5.5' (4' x 5' min. finished surface with longer dimension in direction of pedestrian street crossing).
For the purposes of this application, a max. 2.0% finished surface slope (for drainage) is considered level.

Slope 1.5% max.
(Max. 2.0% finished surface slope)
(Normal sidewalk cross slope)

Slope 7.5% max.
(Max. 8.3% finished surface slope)

* 2' See general note 5

GENERAL NOTES FOR ALL DETAILS ON THIS SHEET:

1. Curb ramp details are based on ODOT applicable standards.
2. See project plans for details not shown.
   See Std. Dwgs. RD700 & RD701 for curbs.
   See Std. Dwg. RD720 for sidewalks.
   See Std. Dwgs. TM503 & TM530 for crosswalk markings, widths, etc.
   See Std. Dwg. RD755 for curb ramp details.
   See Std. Dwg. TM240 for crosswalk closure detail.
   See Traffic Standard Drawings for signal pole and pedestrian pedestal details.
3. Tooled joints are required at all curb ramp slope break lines.
4. Curb ramp slopes shown are relative to the true level horizon (Zero bubble).
5. Place detectable warning surface in the lower 2' of curb ramp that is adjacent to traffic.
   For details not shown, see Std. Dwgs. RD758 & RD759.
6. Check the gutter flow depth to assure that the design flood does not overtop the back of sidewalk.
   If overtopping occurs place an inlet at upstream side or perform other approved design mitigation.
7. Return curb may be provided in lieu of flared slope only if protected from traverse by landscaping or fixed barrier. Return curb shall not reduce width of approaching sidewalk.
8. For the purpose of this drawing, a curb ramp is considered "perpendicular" if the angle between the longitudinal axis of the curb ramp and a line tangent to the curb at the curb ramp center is 75° to 90°.
9. Curb ramps for paths intersecting a roadway should be full width of path, excluding flares. When a curb ramp is used to provide bicycle access from a roadway to a sidewalk, the curb ramp should be 8' wide.
10. When 2 curb ramps are immediately adjacent as in Option G, the curb exposure (e) between the adjacent side flares may range between 3" and full design exposure.
11. Only use options allowed by jurisdiction.
12. On or along state highways, curb and gutter is required at curb ramps.
13. Grade breaks at the top and bottom of curb ramp runs shall be perpendicular to the direction of the ramp run. Grade breaks shall not be permitted on the surface of ramp runs and turning spaces. Surface slopes that meet at grade breaks shall be flush.

CALC. BOOK NO. N/A

BASELINE REPORT DATE 16-JAN-2019

NOTE: All material and workmanship shall be in accordance with the current Oregon Standard Specifications

*The selection and use of this Standard Drawing, while designed in accordance with generally accepted engineering principles and practices, is the sole responsibility of the user and should not be used without consulting a Registered Professional Engineer.*

**OREGON STANDARD DRAWINGS**

**CURB RAMP LAYOUT OPTIONS LARGE RADII**

2018

| DATE | REVISION DESCRIPTION |
|---|---|
| 01-2018 | REVISED DETAILS, REVISED & ADDED NOTES |
| 07-2018 | REVISED NOTES |
| 09-2018 | ADDED DIAGRAM & REVISED NOTE |
| 01-2019 | REVISED DETAILS & NOTES |

Effective Date: June 1, 2019 - November 30, 2019



rd757.dgn 16-JAN-2019

RD757

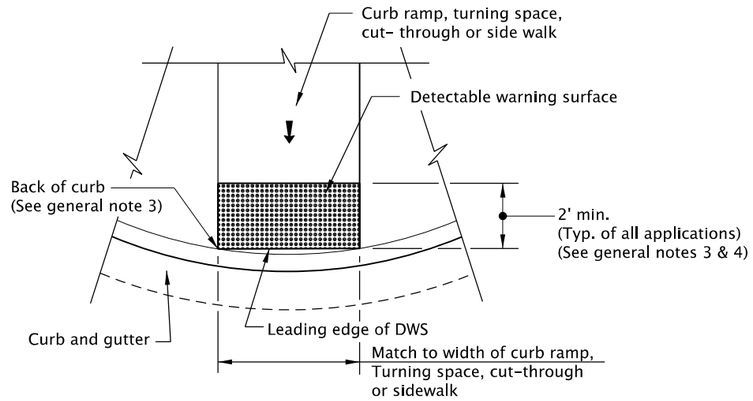


## DETECTABLE WARNING SURFACE DETAIL

| | A | B | C | D | E |
|---|---|---|---|---|---|
| MIN. | 1.60" | 0.65" | 0.45" | 0.90" | 0.20" |
| MAX. | 2.40" | -- | 0.91" | 1.40" | 0.20" |

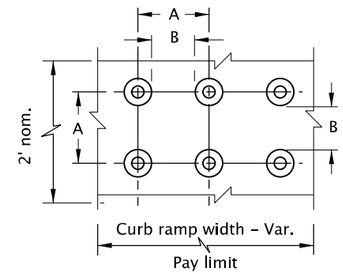


TRUNCATED DOME SPACING

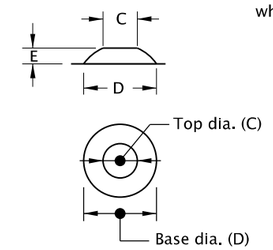


TRUNCATED DOME

## TRUNCATED DOME DETAILS

NOTE: Detectable warning surfaces shall be outside of crossing arms where they exist

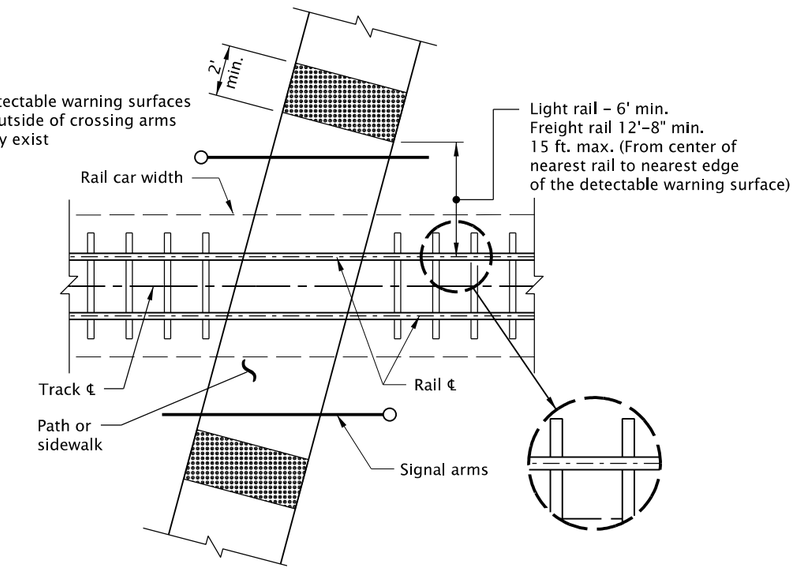


## AT-GRADE RAIL CROSSING

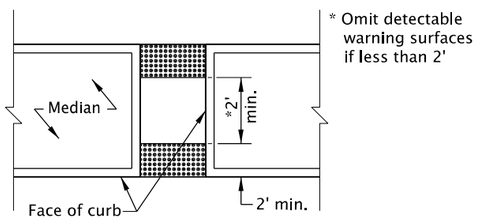


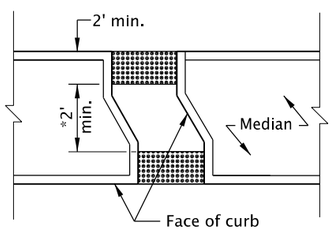


CUT-THROUGH
(Asph. Conc. surface shown)

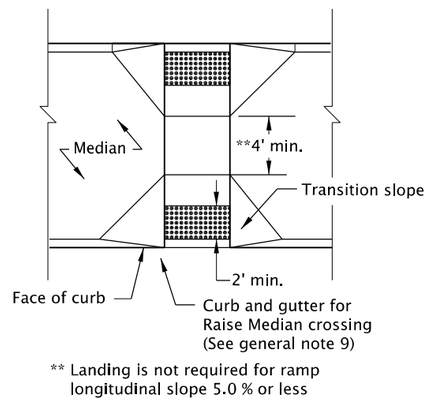


RAISED MEDIAN
(P.C. Conc. surface shown)

## RAISED MEDIAN ISLAND

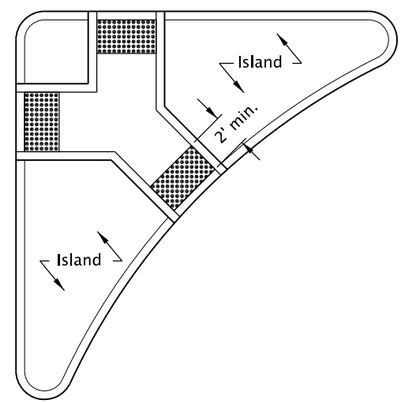


## RAISED RIGHT TURN CHANNELIZATION ISLAND

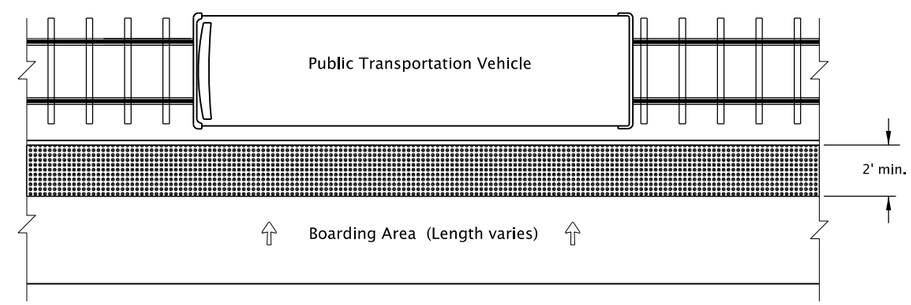


## PUBLIC TRANSPORTATION PLATFORM

(See general note 6)

GENERAL NOTES FOR ALL DETAILS ON THIS SHEET:

1. Detectable warning surface details & locations are based on ODOT applicable Standards.
2. See project plans for details not shown.
   See Std. Dwgs. RD700 & RD701 for curbs.
   See Std. Dwg. RD720 for sidewalks.
   See Std. Dwgs. TM503 & TM530 for crosswalk markings, widths, etc.
   See Std. Dwgs. RD705 & RD710 for islands.
3. The detectable warning surface shall extend the full width of the curb ramp, or other roadway entrance as applicable. A gap of up to 2 inches on each side of the detectable warning surface is permitted (Measured at the leading corners of the detectable warning surface panel).
4. Detectable warning surface shall be placed at the back of curb for a minimum depth of 2 ft. at curb ramps that adjacent to traffic. Detectable warning surface may be radial or rectangular, but must comply with the truncated dome size and spacing standards. Detectable warning surface may be cut to meet necessary shape as shown in plans. Color to be safety yellow if no color specified in construction note. For detectable warning surface on or along state highway, alternative colors must be approved.
5. Detectable warning surface shall be used in the following locations:
   a) Curb ramps (See Std. Dwgs. RD755, RD756, & RD757).
   b) Crossing islands (Accessible Route Islands), (See Std. Dwg. RD710).
   c) Rail crossings (See detail).
6. Where public transportation stations (rail, bus, etc.) use platform boarding, detectable warning surface shall be placed along the full edge length of the station, when not protected by platform screens or guards.
7. Detectable warning surface shall not be used on the following locations:
   a) End of sidewalk transitions that are not at a crosswalk (See Std. Dwg. RD754).
   b) Driveways, unless constructed with curb return. (See Std. Dwgs. RD725, RD730, RD735, RD740, RD745, & RD750).
   c) Parking lots.
8. Grade breaks at the top and bottom of curb ramp runs shall be perpendicular to the direction of the ramp run. Grade breaks shall not be permitted on the surface of ramp runs and turning spaces. Surface slopes that meet at grade breaks shall be flush.
9. Detectable warning surfaces shall be separated by a 2.0 ft minimum length of walkway without detectable warnings. Where the island has no curb, the detectable warning surface shall be placed at the edge of roadway.

Detectable warning surface

Slope 7.5% max. (Max. 8.3% finished surface slope)

Slope 1.5% max. (Max. 2.0% finished surface slope) (Normal sidewalk cross slope)

CALC. BOOK NO. N/A

BASELINE REPORT DATE 16-JAN-2019

NOTE: All material and workmanship shall be in accordance with the current Oregon Standard Specifications

*The selection and use of this Standard Drawing, while designed in accordance with generally accepted engineering principles and practices, is the sole responsibility of the user and should not be used without consulting a Registered Professional Engineer.*

**OREGON STANDARD DRAWINGS**

**DETECTABLE WARNING SURFACE DETAILS & PLACEMENT LOCATIONS**

2018

| DATE | REVISION DESCRIPTION |
|---|---|
| 09-2018 | REVISED DETAILS & NOTES |
| 01-2019 | REVISED DETAILS & NOTES |

rd758.dgn 16-JAN-2019

RD758

Effective Date: June 1, 2019 - November 30, 2019

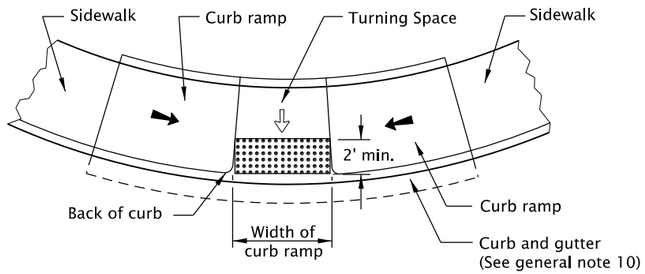


## PARALLEL CURB RAMP

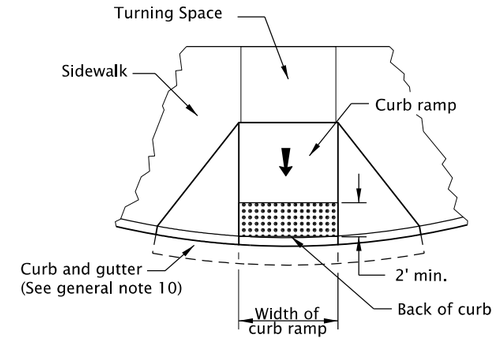


## PERPENDICULAR CURB RAMP

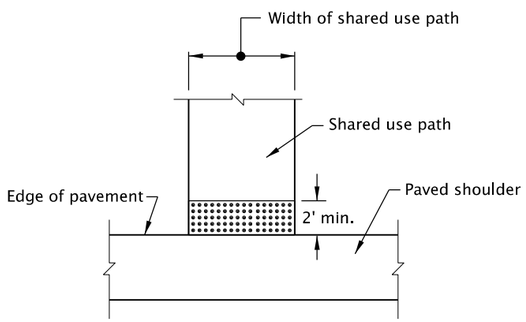


## SHARED-USE PATH CONNECTION

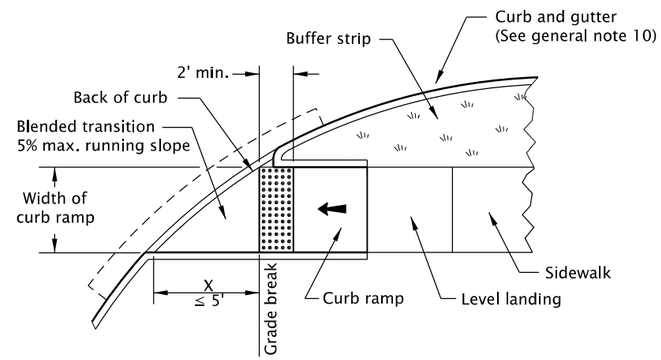


## CURB RAMP CROSSING

### GRADE BREAK ≤ 5 FT. FROM BACK OF CURB

(Detectable warning surface shall be placed on the bottom of the curb ramp directly above the grade break)

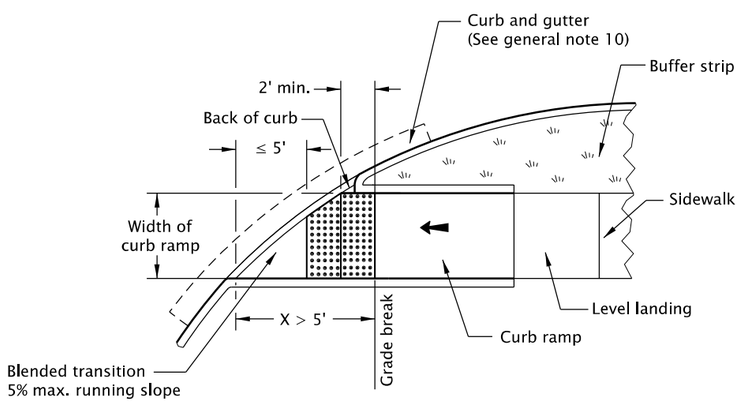


## CURB RAMP CROSSING

### GRADE BREAK > 5 FT. FROM BACK OF CURB

### OPTION 1

(Detectable warning surface shall be placed in area from curb ramp grade break to within 5' of curb)

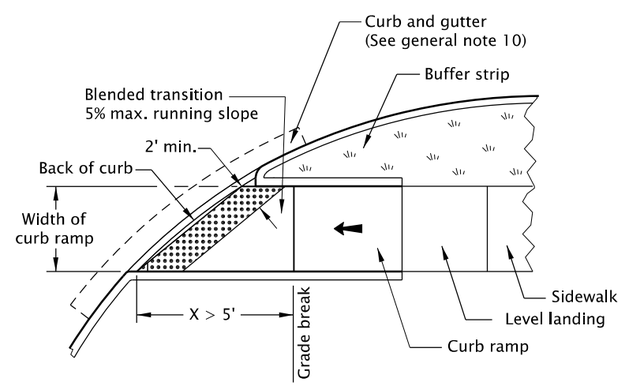


## CURB RAMP CROSSING

### GRADE BREAK > 5 FT. FROM BACK OF CURB

### OPTION 2

(Detectable warning surface shall be placed in the lower 2' of curb ramp that is adjacent to traffic)

GENERAL NOTES FOR ALL DETAILS ON THIS SHEET:

1. Detectable warning surface details & locations are based on ODOT applicable Standards.
2. See project plans for details not shown.
   See Std. Dwgs. RD700 & RD701 for curbs.
   See Std. Dwg. RD720 for sidewalks.
   See Std. Dwgs. TM503 & TM530 for crosswalk markings, widths, etc.
   See Std. Dwgs. RD705 & RD710 for islands.
3. The Detectable Warning Surface shall extend the full width of the curb ramp, or other roadway entrance as applicable. A gap of up to 2 inches on each side of the Detectable warning surface is permitted (Measured at the leading corners of the detectable warning surface panel).
4. Detectable warning surface shall be placed at the back of curb for a minimum depth of 2 ft. at curb ramps that adjacent to traffic. Detectable warning surface may be radial or rectangular, but must comply with the truncated dome size and spacing standards. Detectable warning surface may be cut to meet necessary shape as shown in plans. Color to be safety yellow if no color specified in construction note. For detectable warning surface on or along state highway, alternative colors must be approved.
5. Detectable warning surface shall be used in the following locations:
   a) Curb ramps (See Std. Dwgs. RD755, RD756, & RD757).
   b) Crossing islands (Accessible Route Islands), (See Std. Dwg. RD710).
   c) Rail crossings (See Std. Dwg. RD758).
6. Where public transportation stations (rail, bus, etc.) use platform boarding, detectable warning surface shall be placed along the full edge length of the station, when not protected by platform screens or guards (See Std. Dwg. RD758).
7. Detectable warning surface shall not be used on the following locations:
   a) End of sidewalk transitions that are not at a crosswalk, (See Std. Dwg. RD754).
   b) Driveways, unless constructed with curb return, (See Std. Dwgs. RD725, RD730, RD735, RD740, RD745, & RD750).
   c) Parking lots.
8. **Grade breaks at the top and bottom of curb ramp runs shall be perpendicular to the direction of the ramp run. Grade breaks shall not be permitted on the surface of ramp runs and turning spaces. Surface slopes that meet at grade breaks shall be flush.**
9. Where no curb is present, the detectable warning surface shall be placed at the edge of the roadway.
10. On or along state highways, curb and gutter is required at curb ramps.
11. Detectable warning surface placement for perpendicular ramps vary as shown.

Detectable warning surface

Slope 1.5% max.
(Max. 2.0% finished surface slope)

Slope 7.5% max.
(Max. 8.3% finished surface slope)

CALC. BOOK NO. N/A

BASELINE REPORT DATE 16-JAN-2019

NOTE: All material and workmanship shall be in accordance with the current Oregon Standard Specifications

*The selection and use of this Standard Drawing, while designed in accordance with generally accepted engineering principles and practices, is the sole responsibility of the user and should not be used without consulting a Registered Professional Engineer.*

**OREGON STANDARD DRAWINGS**

**DETECTABLE WARNING SURFACE DETAILS & PLACEMENT LOCATIONS**

2018

| DATE | REVISION DESCRIPTION |
|---|---|
| 07-2018 | REPLACED DRAWING TITLE, REVISED DETAILS & NOTES |
| 09-2018 | REVISED DETAIL & NOTES |
| 01-2019 | REVISED DETAIL & NOTES |

rd759.dgn 16-JAN-2019

RD759

Effective Date: June 1, 2019 - November 30, 2019

# STREETS

**(Parts I & II)**

# STREETS

## (General Requirements)

Superseded see IC#21 P1 w/addition of P2

1. **The design elevation used in the construction plans must be based on the current U.S.C.G.S. datum if available in the area.**

2. **General design standards are contained in Chapter 7, "Troutdale Development Code" and on the enclosed City of Troutdale Standard Drawings/Construction Details.**

3. **The maximum grade on any street shall not exceed 12% without the City's approval.**

4. **The minimum grade on any curbed or guttered street shall not be less than 1.0%.**

5. **Vertical curves shall be used at all changes in street grades in excess of 1.0% slope.**

6. **A cross-street surface drainage will not be permitted except for in cul-de-sac bubbles or on extreme steep cross-street slopes. All cross-street slopes must be approved by the City prior to design and construction.**

7. **Where a straight curb design is authorized for construction by the City, curb exposure shall be 6 inches after the second one and one-half inch thick lift of asphalt is placed.**

8. **Two rain drain curb outlets are required per lot, five feet in from property lines where possible. Where it is not possible, do not place weepholes in conflict with meter boxes, fire hydrants and light poles. All curb drain outlets (weepholes) accidently placed in direct conflict with meter boxes fire hydrants or light poles must be refilled with concrete.**

9. **Barricades are required at all dead-end and/or stub streets. Barricade type(s) will be determined by the City on a per project basis.**

10. **Improvements along County and/or State roads must meet Multnomah County and/or State standards respectively. A written approval from the affected governmental agency (County or State) must be received by the City of Troutdale prior to receiving an authorization to start construction from the City.**

11. **Monolithic concrete curbs and gutters are required. Straight concrete vertical curbs or extruded curbs may be used; however, they must be approved by the City prior to design and or construction.**

12. **All material and workmanship shall meet the requirements of the most current edition of the APWA specifications.**

13. **Control stakes are required for all curb lines and street centerlines during construction, and must be provided by a professional surveyor licensed in the State of Oregon.**

14. **Sub-base shall be approved by the City before placing the base rock, by conducting on-site compaction tests as deemed necessary by the City.**

15. **The subgrade shall be approved before placing the asphalt by conducting on-site compaction tests as deemed necessary by the City. Also, a deflection test(s), performed with a loaded dump or water truck, will be required. This test must be witnessed by the City. No deflection is allowed and all streets must be tested.**

16. **Compaction tests, as requested by the City, must be in accordance with ASSHTO, Method T-180. Over-excavation and/or stabilization fabric may be required by the City if the subgrade is soft or otherwise found unsuitable.**

17. **Asphaltic concrete (AC) Class "C" (ODOT classification) is required for final top lifts. AC Class "B" (ODOT classification) or Class "C", as determined by the City, may be used for the first lift. Pavement will be placed only on dry, clean and properly prepared surfaces, and when the air temperature meets the specifications as set forth in the most recent edition of the American Public Works Association standards for construction.**

18. **All joints between the AC and concrete structures must be tacked with bitumastic.**

19. **All required utilities (sanitary sewer, storm sewer, water lines, power, telephone, gas, street lights, etc.) shall be in-place and their locations accurately located on "as-built" drawings. A final inspection by City staff will be required to verify their condition; and, if deficiencies on any of them are noted, they must be corrected prior to paving.**

20. **Construction of "overhead" power and/or all other private utilities is not allowed. Overhead power undergrounding is required in all "new" street construction and in "significant" street reconstruction. New developments required to do "half" street improvements are considered to be "significant", and if "overhead" power is existing, it must be switched from overhead to underground as part of the development. All costs incurred from power undergrounding will be the responsibility of the developer.**

21. **All construction activity shall be done in a safe, neat and workmanlike manner, and under supervision of City forces at all times. All safety requirements and other rules and regulations from OSHA, DEQ and all other State regulating agencies must be met.**

22. **Prior to any on-site street work, the contractor must submit a traffic plan to the City to review and approve. No street work affecting lanes of traffic shall begin prior to such approval.**

23. Developers constructing new streets must provide a "two-year" maintenance bond to the City. This bond shall be for ten percent of the total cost to construct the streets. An additional bond for placement of the final 1 and 1/2 inch lift of asphalt is also required. The amount of this bond will be determined by the City before the bond is submitted. The amount of the bond shall include all costs for preparatory work, materials and labor, plus 30 percent for administrative overhead. Weather permitting, this second 1 and 1/2 inch thick lift of AC may be placed after 90 percent of the home certificates of occupancy have been issued, or in two years from the date of acceptance of the project, whichever comes first. The City fully expects the developer to select a paving contractor to place this final 1 and 1/2 inch lift, and to pay all expenses incurred from this action. In the event that the developer fails to undertake this obligation for whatever reason, the City will immediately file a claim against the aforementioned bond to place this lift of AC.

24. Street name signs, speed limit signs and other signs as deemed necessary by the City will be provided and installed by City forces just prior to issuance of a "certificate of completion", or shortly thereafter. Costs incurred by the City for materials and labor will be forwarded to the developer for reimbursement. Also, if applicable, a "private street" sign (see Drawing No. II-24) will be required.

25. All work affecting existing streets requires the issuance of a public works permit and inspection by the City. A permit fee of $50.00 will be assessed per permit.

Deleted see IC#13

26. All newly built lots made available by the construction of new subdivisions and/or streets must be certified as "buildable lots" by the registered geotechnical/civil engineer in charge of the project. This certification must be in written format and submitted to the City before a certificate of completion can be issued.

27. All new improvements proposed for construction and intended for public dedication (once these same facilities are constructed to City standards) must be proposed to the City in writing, by the developer and/or legal owner of the project, prior to the receipt of an authorization to begin construction from the City. This formal written request from the developer/owner to the City must be reviewed and approved by the City, and then signed by both parties to formally bind both parties to the agreement.

28. All other street construction practices within the City's public right-of-way, not covered in these "general requirements" and/or in the "construction details" sections, shall comply with the rules and regulations found in the most recent edition(s) of the American Public Works Association Standard Specifications for Public Works Construction, and/or the State of Oregon Standard Specifications for Highway Construction.

See IC #8 for additional - paragraph "29" and attachments.

See IC # 28 for additional paragraph "30". Clustered Mailboxes

See Ic # 29 for additional paragraph "31" & "32" Sidewalk remediation.

# STREETS

## (Part I)

*** General Requirements**
*** Standards for Pavement Overlay**

# STANDARDS FOR PAVEMENT OVERLAY

**The following standards and specifications shall apply to the work required to properly overlay streets within the City of Troutdale.**

## Section I - Repairs of Existing Facilities and Asphalt Surface

**a.** **All catch basins will be adjusted, relocated or replaced if improperly built or located.**

**b.** **All manholes, gate valve boxes, clean outs, etc., shall be adjusted to final grade, and properly referenced and/or marked to avoid covering with overlay.**

**c.** **The existing asphalt-pavement surface shall be restored to true line and grade. All areas showing evidence of failure shall be removed and repaired to the satisfaction of the City. All distortions which vary from true grade by more than 1/2 inch shall be brought to grade before the final lift is placed. All utility trenches, patches, or other damage caused by construction shall be repaired.**

**d.** **All areas showing evidence of actual failure, i.e., chuck holes, alligator cracking, scaling, slipping, etc., shall be repaired using the following method:**

1. **Remove eight inches of the surface and base or as much as necessary to reach firm support, extending at least one foot horizontally into good pavement outside the cracked area. Make the cut square or rectangular with vertical edges. One pair of cuts should be at right angles to the direction of traffic. Cuts are to be made with a saw or broad cutting blade and air hammer.**

2. **If water is the cause of the failure, install proper drainage prior to overlay.**

3. **If the excavation is deeper than eight inches, restore grade to eight inches from surface using 1-inch minus base crushed rock and compacted in six-inch lifts to 95% compaction, relative maximum density.**

4. **Apply a tack coat to the vertical edges of the area to be patched.**

5. **Place required depth of hot asphalt mix patch (minimum of 4", total compacted thickness) in lifts not exceeding two inches (compacted depth).**

6. **Check the finished patch with a straight edge or string line to ensure that it matches existing pavement.**

## Section II - Cleaning of Existing Asphalt Surface

a. **General Cleaning**

All street sections to be overlayed will be thoroughly cleaned. All large accumulations of mud, rock, concrete or other construction debris shall first be removed by hand or equipment which will not cause damage to existing pavement. Do not wash down silt, gravel, construction debris, et cetera, into the storm sewer system via street catch basins.

b. **Brooming**

All street sections to be paved will be cleaned by mechanical brooming.

c. **Washing**

All streets, prior to paving, will be washed with high pressure hoses or water trucks with high pressure discharge.

## Section III - Asphalt Tack Coat

a. **Surface Preparation**

The surface to be tacked shall be dry and shall have been cleaned as required by Section II so it is free of dirt, dust, or other matter foreign to the surface or detrimental to the adherence of the tack coat.

b. **Material**

The liquid asphalt to be used in the tack coat shall be CRS-1, CRS-2 or CSS-1 and shall be the kind and type for the conditions under which the work is to be performed.

c. **Application**

The asphalt shall be spread by means of pressure-spray equipment which will provide uniformity of application at prescribed rates. Normally, asphalt shall be applied to the prepared surface at a rate of 0.1 to 0.2 gallons per square yard of surface, the actual rate to be as directed by the City. The tack coat shall not be applied during wet or cold weather or during darkness and shall be laid only so far in advance as is appropriate to insure a tacky, sticky condition of the asphalt at the time of placing the overlay.

## Section IV - Asphalt Pavement

a. **Surface Preparation**

Asphalt pavement shall be placed only on those surfaces prepared as per Sections I, II and III and approved by the City.

b. **Control of Traffic and Access**

**The contractor shall notify any persons who might be affected by street closures or reduced access at least 48 hours prior to the closure or restriction. Contractors' operations shall be conducted or scheduled so as to minimize interruption of traffic.**

**c. Materials**

**Asphalt overlays shall be 1", 1-1/2" or 2" as required by the applicable plans or specifications. The only asphalt mix allowed by the City for top lifts is Class "C" mix (ODOT specifications).**

**d. Application**

**Asphalt overlays will be placed only on dry, clean and properly prepared surfaces and when the air temperature is not lower than 55° F. Placing overlays during rain or other adverse weather will NOT be permitted.**

**All vertical edges such as curb, catch basins, manholes, valve boxes, or edges of existing pavements shall be properly prepared and coated with a film of tack coat material; proper care must be taken to prevent coverage on concrete surface to remain exposed after paving. If necessary, the contractor must return to clean surfaces accidently covered or left with excess AC debris.**

**The contractor shall provide adequate marks, lines, or other control method to insure proper curb exposure, depth of overlay, and street profile and overall finished grade.**

**Proper equipment shall be furnished suitable for the proposed work and capable of constructing a true surface.**

**The temperature of the mix at the time it is spread into final position shall be between 260° and 300° F. Longitudinal joints shall be made while adjacent material temperatures are high enough to ensure smooth kneading of material. AC not meeting these temperature requirements will not be accepted.**

**Immediately after placing, the mix shall be compacted to a density of not less than 90 percent of relative maximum density. Compaction tests will be taken as requested by the City to ensure compliance. If in any case the compaction test results show anything less than 90 percent compaction, AC core samples will be required. The City will determine at what locations to obtain the core samples. Based on the results of these tests, the City will determine whether the substandard lift placed is to be removed and replaced. The City's decision will be final.**

# STREETS

## (Part II)

## * Construction Details

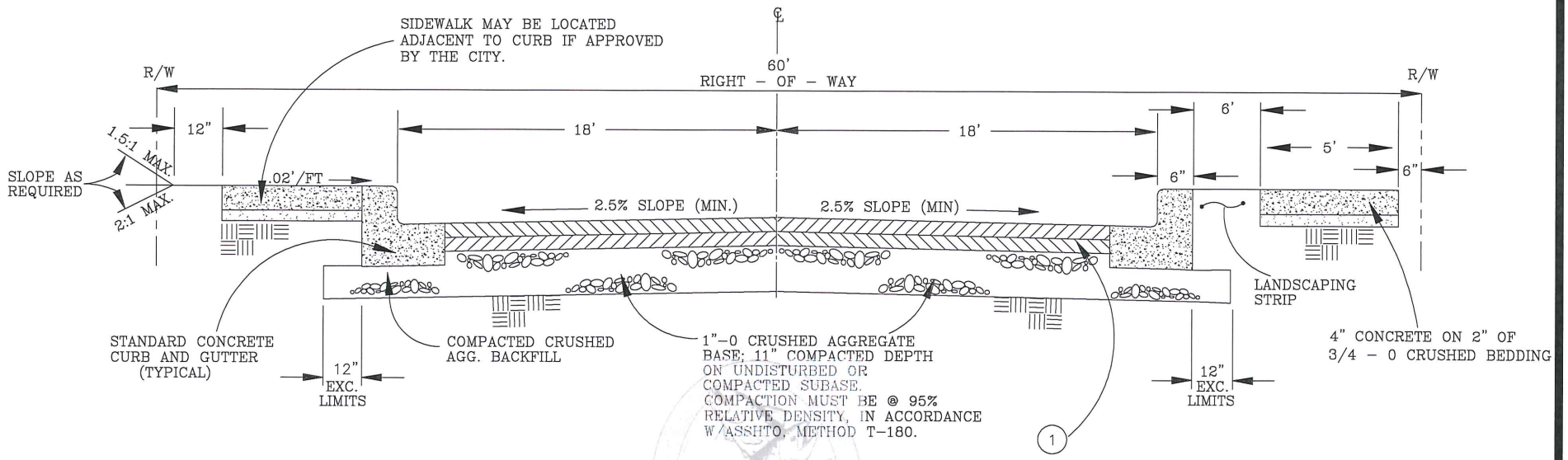


# COMMERCIAL/INDUSTRIAL STREET CROSS SECTION

NOTES:

(1) 4" OF ASPHALTIC CONCRETE CLASS "B" (ODOT SPECIFICATIONS) PLACED IN 2 EQUAL LIFTS OF 2" EACH. 1ST LIFT SHALL BE 2" COMPACTED DEPTH. COMPACT TO NO LESS THAN 91% COMPACTION. FINAL 2" LIFT WILL BE PLACED AFTER 90% OF THE CERTIFICATES OF OCCUPANCY HAVE BEEN ISSUED OR 2 YEARS AFTER THE FIRST LIFT, WHICHEVER COMES FIRST. CITY MAY ALSO REQUEST THAT BOTH LIFTS BE PLACED AT THE SAME TIME.

GENERAL:

1. THESE STANDARDS ARE SHOWN AS MINIMUM ALLOWABLE STANDARDS. THE CITY MAY REQUIRE MODIFICATIONS DUE TO ADVERSE SOIL CONDITIONS, SPECIAL TRAFFIC CONDITIONS OR OTHER UNFORESEEN RELEVANT FACTORS.

2. ALL MATERIAL AND WORKMANSHIP SHALL MEET THE REQUIREMENTS OF THE AMERICAN PUBLIC WORKS ASSOCIATION STANDARD SPECIFICATIONS.

3. DEFLECTION/COMPACTION TESTS WILL BE REQUIRED AS DEEMED NECESSARY BY THE CITY. NO DEFLECTION IS ALLOWED.

4. SUBGRADE MUST BE APPROVED BY THE CITY PRIOR TO PAVING.

Superseded see IC#17

CITY OF TROUTDALE

COMMERCIAL/INDUSTRIAL STREET CROSS SECTION

DATE: UPDATED 1997

DRAWING NO. II – 1

FILENAME: APWA0140.DWG

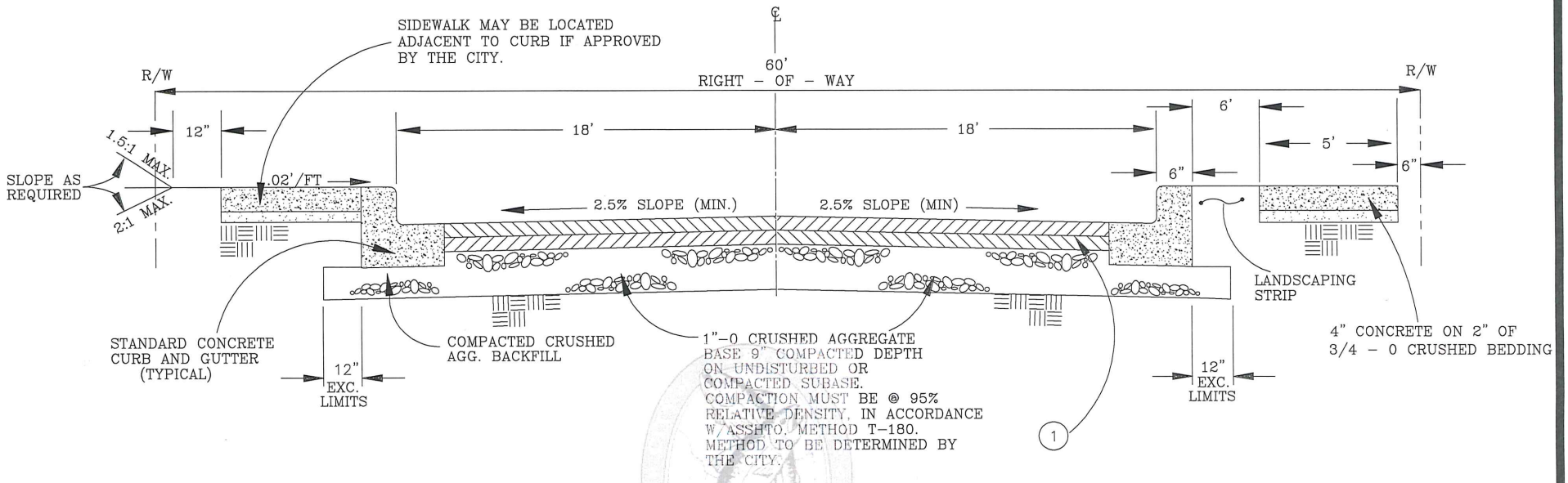


# NEIGHBORHOOD COLLECTOR

NOTES:

(1) 4" OF ASPHALTIC CONCRETE CLASS "C" PLACED IN 2 EQUAL LIFTS OF 2" EACH. 1ST LIFT SHALL BE 2" COMPACTED DEPTH. COMPACT TO NO LESS THAN 91% COMPACTION. FINAL 2" LIFT WILL BE PLACED AFTER 90% OF THE CERTIFICATES OF OCCUPANCY HAVE BEEN ISSUED OR 2 YEARS AFTER THE FIRST LIFT, WHICHEVER COMES FIRST.

GENERAL:

1. THESE STANDARDS ARE SHOWN AS MINIMUM ALLOWABLE STANDARDS. THE CITY MAY REQUIRE MODIFICATIONS DUE TO ADVERSE SOIL CONDITIONS, SPECIAL TRAFFIC CONDITIONS OR OTHER UNFORESEEN RELEVANT FACTORS.

2. ALL MATERIAL AND WORKMANSHIP SHALL MEET THE REQUIREMENTS OF THE AMERICAN PUBLIC WORKS ASSOCIATION STANDARD SPECIFICATIONS.

3. DEFLECTION/COMPACTION TESTS WILL BE REQUIRED AS DEEMED NECESSARY BY THE CITY. NO DEFLECTION IS ALLOWED.

4. SUBGRADE MUST BE APPROVED BY THE CITY PRIOR TO PAVING.

CITY OF TROUTDALE

NEIGHBORHOOD COLLECTOR (CROSS SECTION)

DATE: UPDATED 1997

DRAWING NO. II - 2

FILENAME: APWA0001.DWG

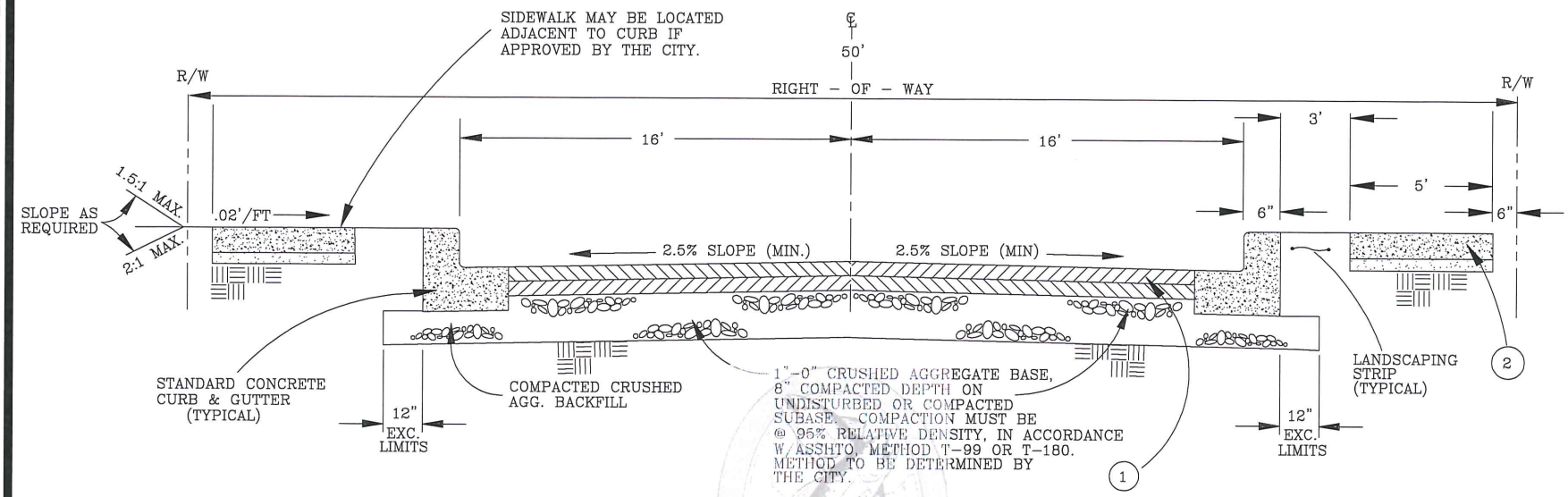


# LOCAL STREET CROSS SECTION

NOTES:

(1) 3 1/2" OF ASPHALTIC CONCRETE CLASS "C" PLACED IN 2 LIFTS. 1ST LIFT SHALL BE 2" COMPACTED DEPTH. COMPACT TO NO LESS THAN 91% COMPACTION.
FINAL 1 1/2" LIFT WILL BE PLACED AFTER 90% OF THE CERTIFICATES OF OCCUPANCY HAVE BEEN ISSUED OR 2 YEARS AFTER THE FIRST LIFT, WHICHEVER COMES FIRST.

(2) 4" THICK CONCRETE SIDEWALK ON MINIMUM OF 2" COMPACTED DEPTH OF 3/4" – 0 CRUSHED ROCK.

GENERAL:

1. THESE STANDARDS ARE SHOWN AS MINIMUM ALLOWABLE STANDARDS. THE CITY ENGINEER MAY REQUIRE MODIFICATIONS DUE TO ADVERSE SOIL CONDITIONS, TRAFFIC CONDITIONS, OR OTHER UNFORESEEN RELEVANT SITE CONDITIONS.

2. ALL MATERIALS AND WORKMANSHIP SHALL MEET THE REQUIREMENTS OF THE AMERICAN PUBLIC WORKS ASSOCIATION STANDARD SPECIFICATIONS.

3. DEFLECTION/COMPACTION TESTS WILL BE REQUIRED AS DEEMED NECESSARY BY THE CITY. NO DEFLECTION IS ALLOWED.

4. SUBGRADE MUST BE APPROVED BY THE CITY PRIOR TO PAVING.

CITY OF TROUTDALE

LOCAL STREET (CROSS SECTION)

DATE: UPDATED 1997

DRAWING NO. II – 3

FILENAME: APWA0101.DWG

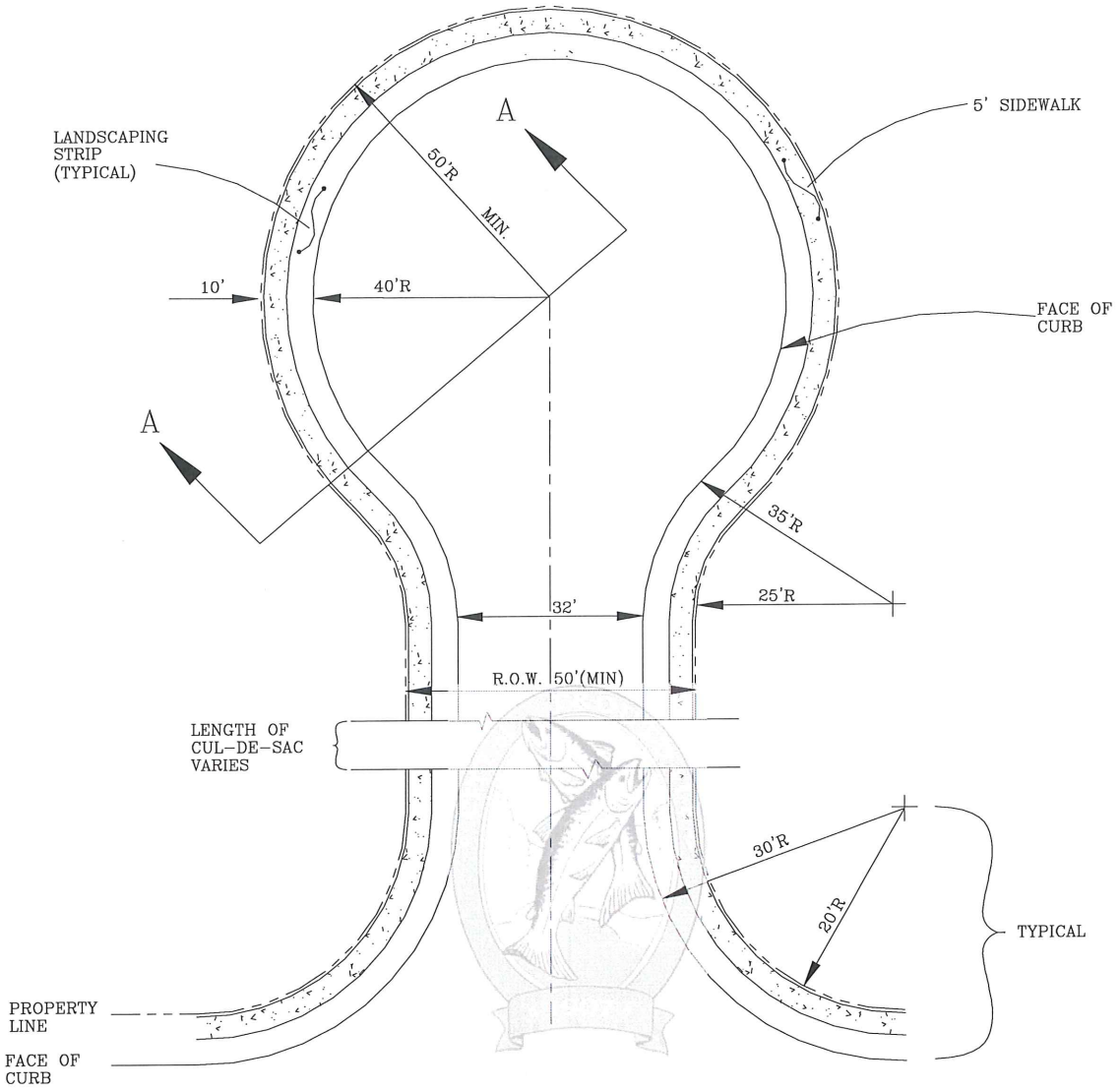


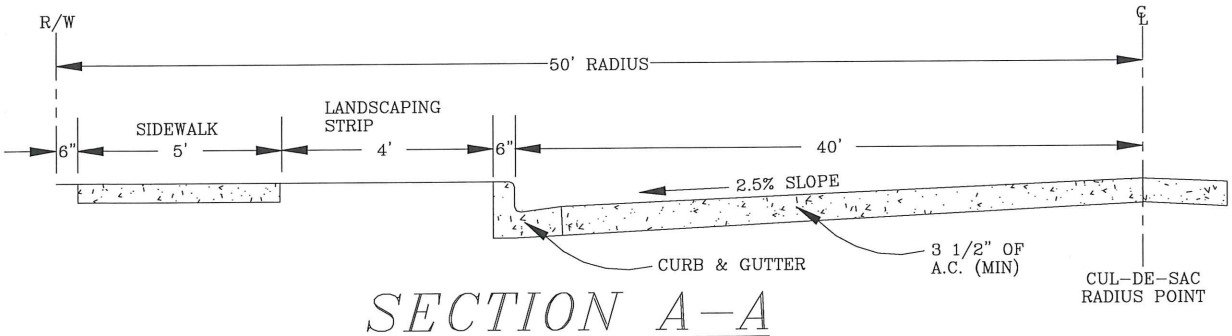


## SECTION A–A

GENERAL NOTES:

1. ALL VARIENCES TO THE ABOVE DIMENSIONS MUST BE APPROVED BY THE CITY PRIOR TO CONSTRUCTION.
2. PROVIDE QUARTER "BLUE TOPS" AROUND CUL-DE-SAC BULB, AS MAY BE NECESSARY, TO ENSURE A CONTINUOUS 2.5% SLOPE FROM THE CENTER POINT OF THE CUL-DE-SAC.

CITY OF TROUTDALE

# CUL-DE-SAC & INTERSECTION RADII

| DATE: | DRAWING NO. |
|---|---|
| UPDATED 1997 | II – 4 |

FILENAME: APWA0106.DWG

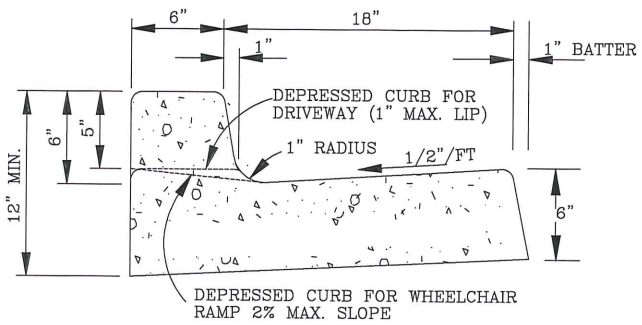


TYPICAL CURB & GUTTER

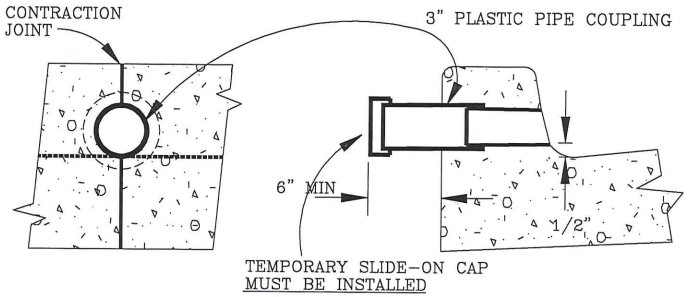


WEEP HOLE THROUGH CURB

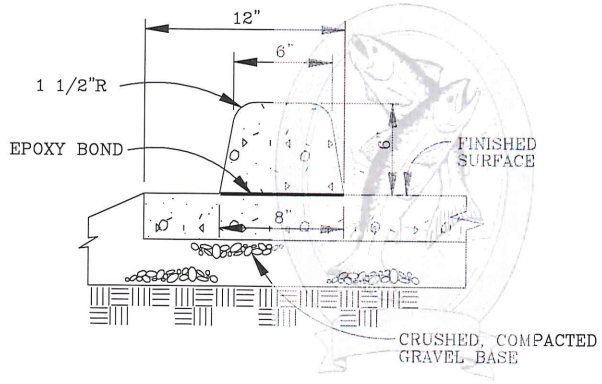


EXTRUDED CONCRETE BONDED CURB

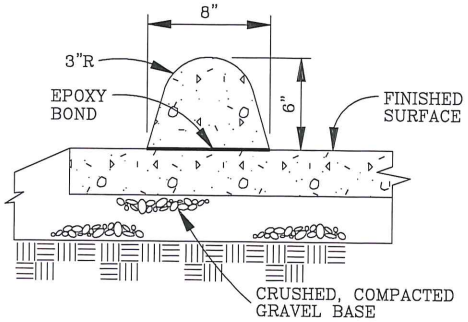


EXTRUDED AC BONDED CURB

GENERAL NOTES:

1. ALL RADII SHALL BE 3/4" EXCEPT AS OTHERWISE SHOWN.
2. CONCRETE: 3300 PSI @ 28 DAYS.
3. CONTRACTION JOINTS SHALL BE PLACED AT 15' INTERVALS AND SHALL EXTEND AT LEAST 50% THROUGH THE CURB OR CURB AND GUTTER. EXPANSION JOINTS SHALL BE @ 45' INTERVALS AND AT END OF CURB RETURNS. CURBS NOT MEETING THESE STANDARDS MUST BE REMOVED AND REPLACED IN ACCORDANCE WITH THESE REQUIREMENTS.
4. A CONTRACTION JOINT SHALL BE PLACED ALONG AND OVER WEEP HOLE THROUGH THE CURB AND THROUGH THE SIDEWALK.
5. PRIOR TO CONSTRUCTION OF SIDEWALKS, EXTEND 4" DRAIN PIPE TO BACK OF SIDEWALK AND INSTALL COUPLING. PLUG IF CONNECTION TO RAINDRAIN/CRAWLSPACE DRAIN IS NOT BEING MADE AT THE SAME TIME, TO RESTRICT SOIL FROM ERODING TO THE STREET THROUGH THE WEEPHOLE.
6. THE CITY MUST GRANT APPROVAL TO CONSTRUCT STRAIGHT AND EXTRUDED CURBS.
7. AVOID PLACING WEEPHOLES IN CONFLICT WITH WATER METER BOXES, FIRE HYDRANTS, STREET LIGHT POLES AND OTHER STRUCTURES. IF WEEPHOLES ARE ACCIDENTLY PLACED IN CONFLICT WITH OTHER STRUCTURES, ALL WEEPHOLES IN CONFLICT MUST BE RE-FILLED WITH CONCRETE.
8. PLUG ALL WEEPHOLE PIPES WITH A SLIDE-ON CAP TO PREVENT SOIL EROSION ONTO THE STREET.

CITY OF TROUTDALE

CURBS & WEEPHOLES

DATE: UPDATED 1997

DRAWING NO. II - 5

FILENAME: APWA0003.DWG

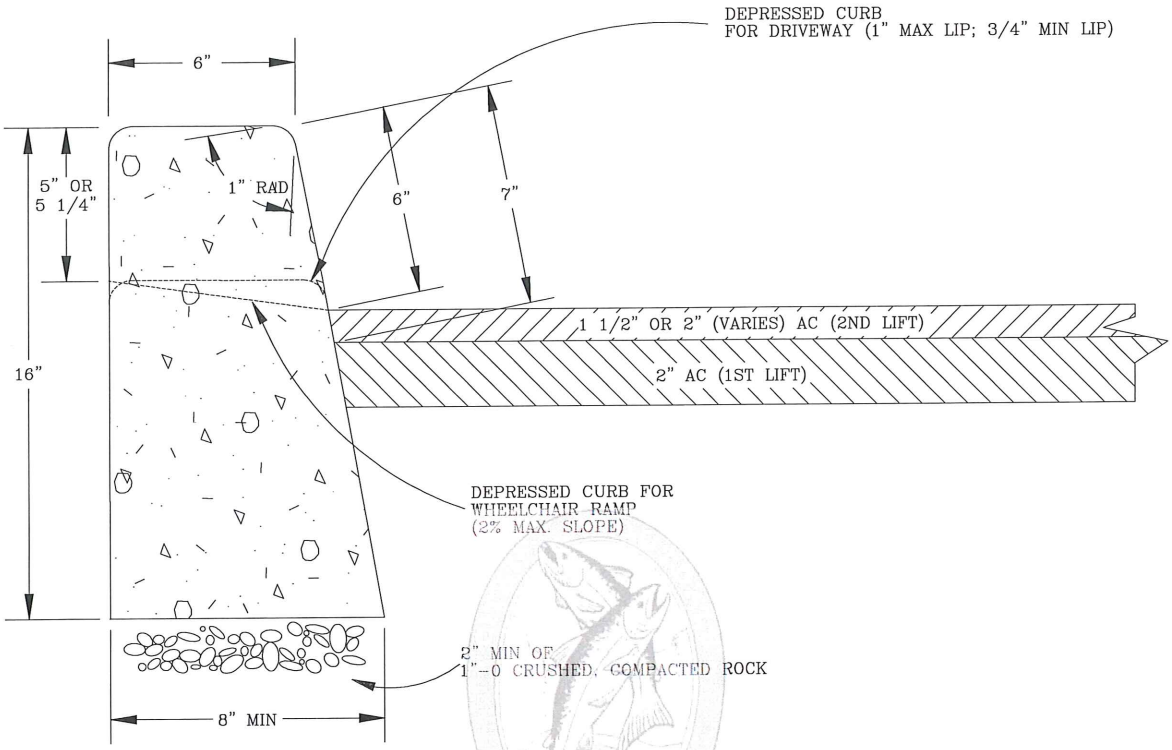


# STRAIGHT CURB

GENERAL NOTES:

1. CONCRETE: 3300 PSI @ 28 DAYS.

2. THE CITY MUST GRANT APPROVAL TO CONSTRUCT STRAIGHT CURBS, AND EXTRUDED CURBS.

3. CONTRACTION JOINTS SHALL BE PLACED @ 15' INTERVALS AND SHALL EXTEND AT LEAST 50% THROUGH THE CURB OR CURB & GUTTER. EXPANSION JOINTS SHALL BE @ 45' INTERVALS & AT END OF CURB RETURNS. ALL CURBS NOT MEETING THESE REQUIREMENTS SHALL BE REMOVED AND REPLACED TO BE IN ACCORDANCE WITH THESE REQUIREMENTS.

| CITY OF TROUTDALE | |
|---|---|
| STRAIGHT CURB | |
| DATE: UPDATED 1997 | DRAWING NO. II – 6 |

FILENAME: APWA0110.DWG

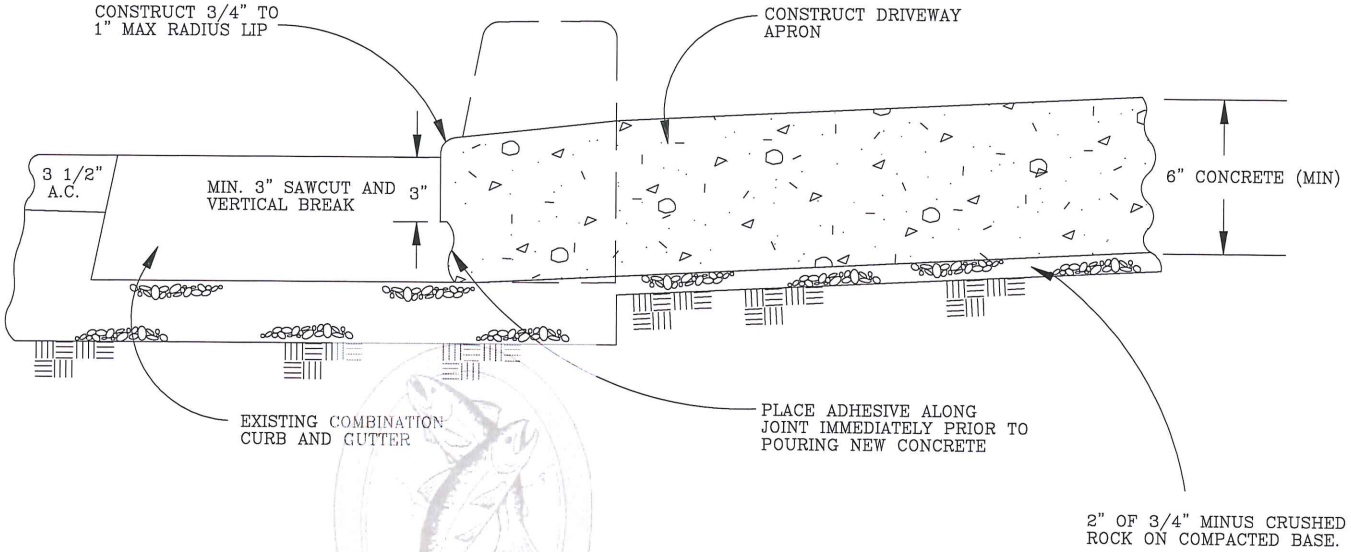


GENERAL NOTES:

1. SAWCUT THROUGH GUTTER PLATE SHALL BE MADE AS CLOSE TO CURB FACE AS POSSIBLE.
2. ENTIRE CURB AND GUTTER SHALL NOT BE REMOVED UNLESS DIRECTED BY THE CITY.
3. DO NOT UNDERMINE EXISTING CURB AND GUTTER OR THE STREET SUBGRADE WHEN REMOVING THE CURB AND GUTTER OR STRAIGHT CURBS TO POUR A DRIVEWAY APPROACH AND/OR CURB DROP. IF ACCIDENTAL UNDERMINING OCCURES UNDER EXISTING PAVEMENT, THE ASPHALT ABOVE THE UNDERMINDED AREA MUST BE SAW CUT, THEN THE SUBGRADE RE-COMPACTED AND THE AFFECTED AREA REPAVED.
4. IF POURING A CONCRETE APPROACH, WHICH WILL ABUT TO A PRE-EXISTING CONCRETE SIDEWALK AND DRIVEWAY, EXPANSION JOINTS OF CEDAR WOOD OR EQUAL MUST BE INSTALLED.

CITY OF TROUTDALE

# CURB KNOCKOUT FOR DRIVEWAYS

DATE: UPDATED 1997

DRAWING NO. II - 7

FILENAME: APWA0010.DWG

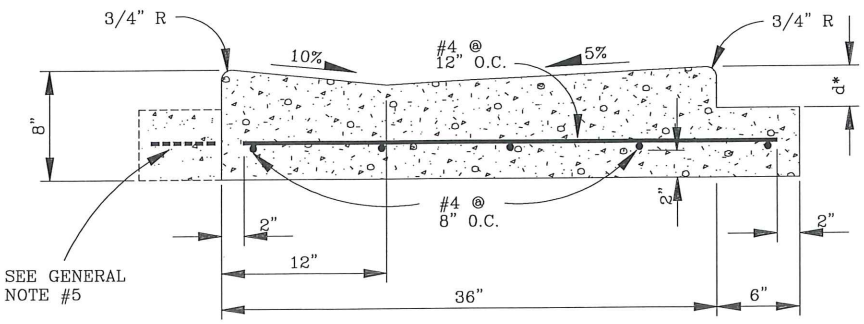


NON–SYMMETRICAL "V" GUTTER

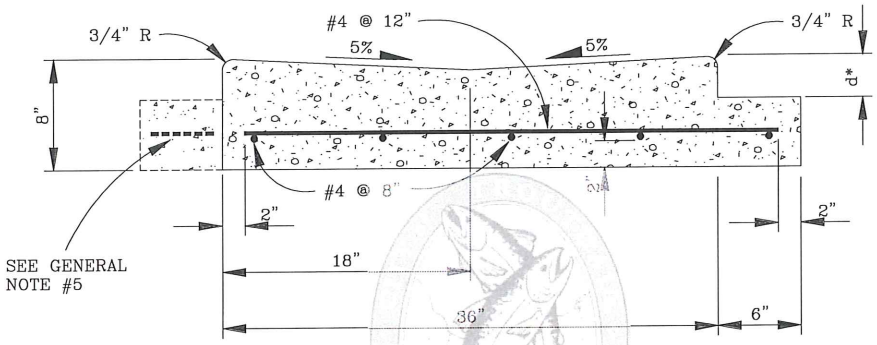


SYMMETRICAL "V" TYPE GUTTER

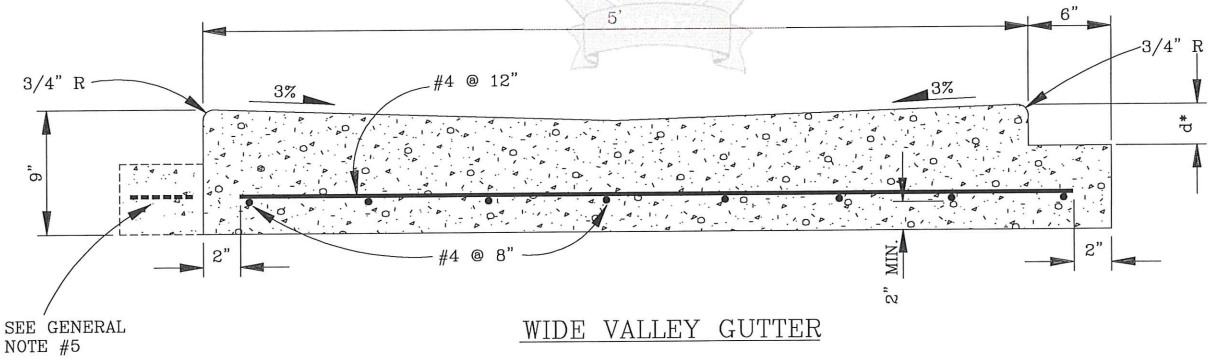


WIDE VALLEY GUTTER

GENERAL NOTES:

1. d* = THICKNESS OF ASPHALT PAVING.
2. THE CONCRETE SHALL BE CLASS 3300 PSI @ 28 DAYS.
3. CONSTRUCT 6" BENCH MONOLITHICALLY WITH VALLEY GUTTER TO EXTEND UNDER PAVEMENT FOR PAVEMENT SUPPORT.
4. PLACE PREMOLDED FILLER AGAINST VERTICAL FACE WHERE VALLEY GUTTER ABUTS CONCRETE.
5. CONSTRUCT 6" x d DEPRESSED BENCH WHERE VALLEY GUTTER ABUTS ASPHALT PAVEMENT. DO ON BOTH SIDES OF VALLEY GUTTER.
6. CONSTRUCT SYMMETRICAL "V" TYPE GUTTER UNLESS OTHERWISE DIRECTED BY THE CITY.

CITY OF TROUTDALE

# CONCRETE CROSS GUTTERS

| DATE: | DRAWING NO. |
|---|---|
| UPDATED 1997 | II – 8 |

FILENAME: APWA0004.DWG

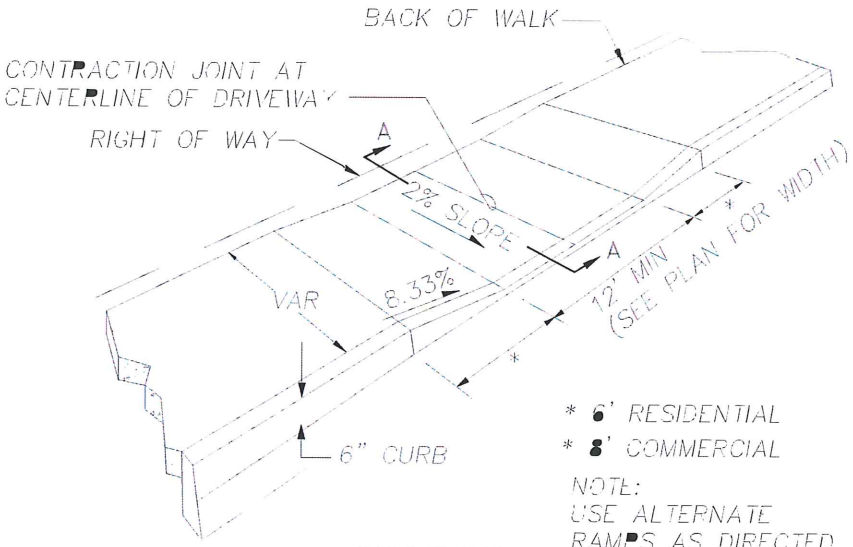


DRIVEWAY

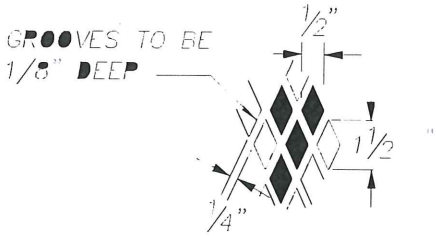


RAMP TEXTURE

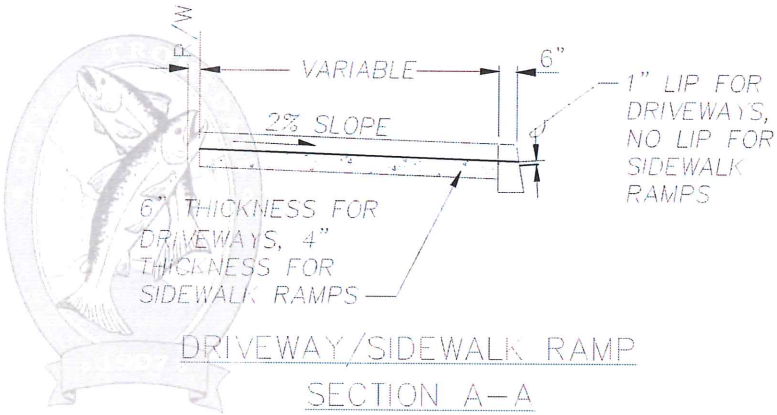


DRIVEWAY/SIDEWALK RAMP
SECTION A–A

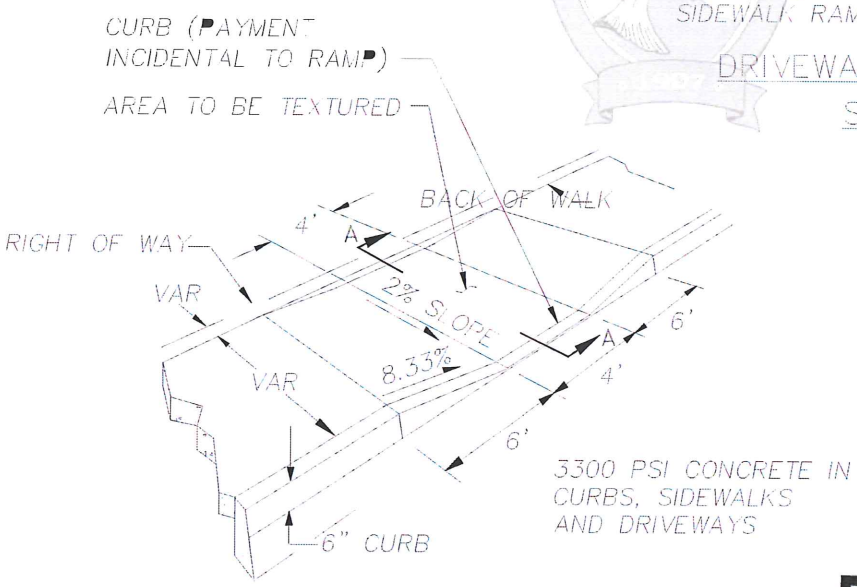


SIDEWALK RAMP

Interim changes IC#10 & 24 are superseded by IC#36 and are obsolete

Superseded by IC# 9 - 3/27/03
Superseded by IC#10 - 7/31/03
Superseded by **IC#24 7/24/14**

SIDEWALK AND DRIVEWAY RAMP
DETAIL
NOT TO SCALE

4,5

CITY OF TROUTDALE

WHEELCHAIR RAMPS

DATE
UPDATED 2000

DRAWING NO
II - 9

FILENAME: APW4006.DWG

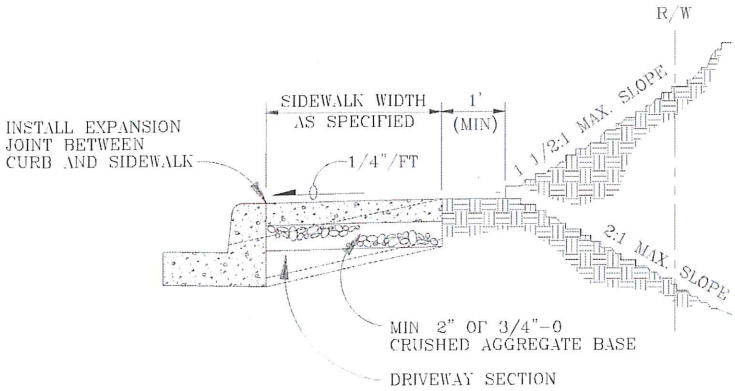


NOTE:
CONCRETE DEPTH FOR STANDARD SIDEWALKS SHALL BE NOMINAL 4" MIN.; DRIVEWAY SECTIONS INCLUDING SIDEWALKS THROUGH DRIVEWAYS SHALL BE NOMINAL 6" MIN.

**See IC #33 for additonal information**

## SIDEWALK ADJACENT TO CURB (CROSS SECTION)

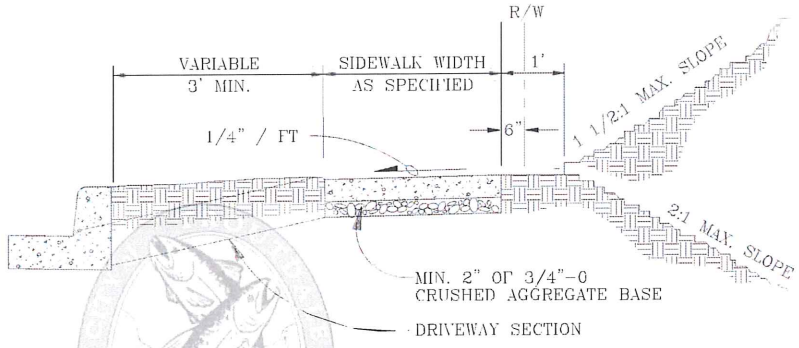


## SIDEWALK ADJACENT TO LANDSCAPING STRIP (CROSS SECTION)

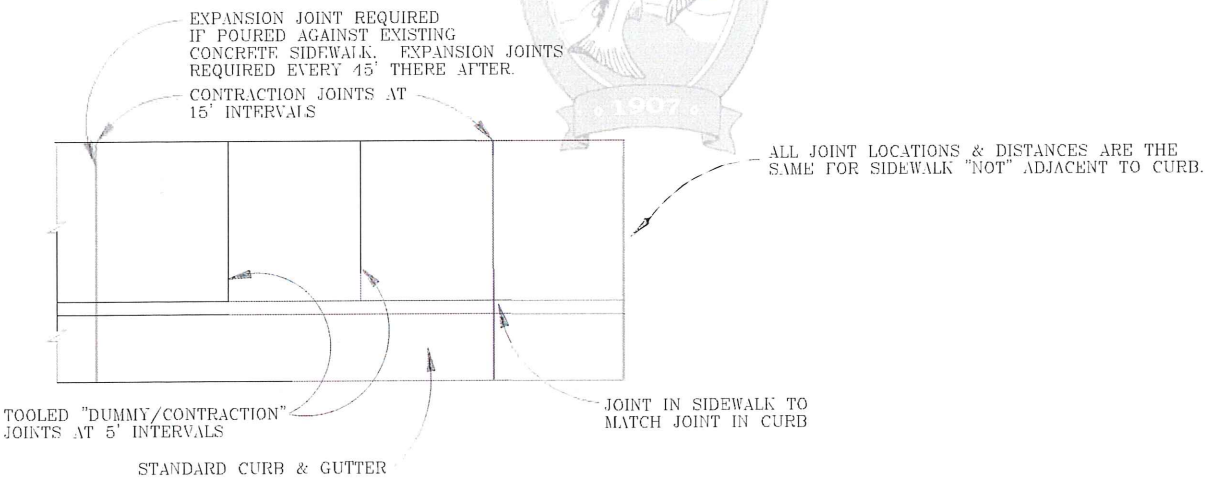


## TYPICAL PLAN VIEW

GENERAL NOTES:

1. CONCRETE: 3300 PSI @ 28 DAYS. SLUMP RANGE OF 1.5" TO 3" MAX.
2. MINUMUM SIDEWALK THICKNESS SHALL BE 4"; IN DRIVEWAY APPROACH AREAS, IT MUST BE NO LESS THAN 6" THICK.
3. SIDEWALKS SHALL BE COATED WITH APPROVED CURING COMPOUND.
4. ALL SURFACES ARE TO BE TROWELLED AND BROOMED IN A WORKMAN LIKE MANNER.
5. EXPANSION JOINTS ARE REQUIRED AT SIDES OF DRIVEWAY APPROACHES AND UTILITY VAULTS. DISTANCES BETWEEN EXPANSION JOINTS SHALL BE AT 45'.
6. SIDEWALK WIDTHS SHALL BE AS FOLLOWS:
   - RESIDENTIAL 5' WIDE
   - COMMERCIAL 6' WIDE
   - INDUSTRIAL 5' WIDE

CITY OF TROUTDALE

# CONCRETE SIDEWALK
(CURB SIDE & BY LANDSCAPING STRIP)

| DATE: | DRAWING NO. |
|---|---|
| UPDATED 1997 | II – 10 |

FILENAME: APWA0005.DWG

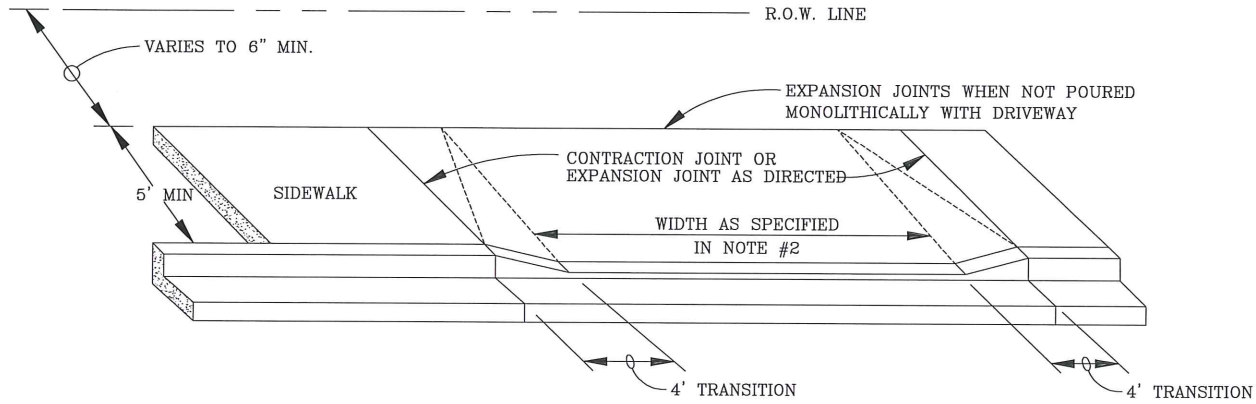


DRIVEWAY APPROACH FOR CURBLINE SIDEWALK

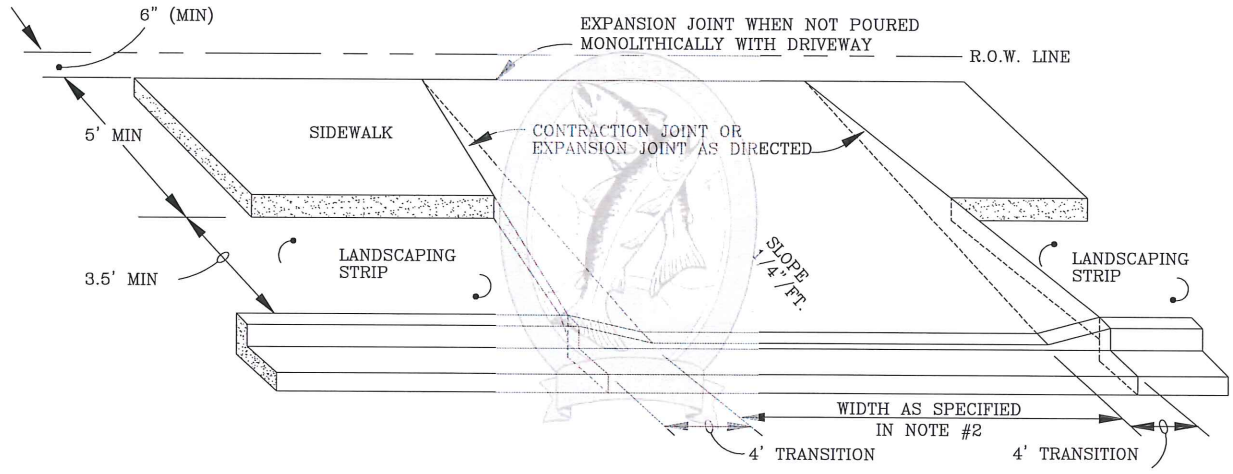


DRIVEWAY APPROACH FOR SET-BACK SIDEWALK

Superseded by IC# 9 - 3/27/03
Superseded by IC#10 - 7/31/03
Superseded by IC#19 - 6/8/11
Superseded by IC#30 9/20/16

GENERAL NOTES:

1. CONCRETE FOR COMMERCIAL AND INDUSTRIAL USE SHALL HAVE A NOMINAL THICKNESS OF 8" OF 3300 PSI @ 28 DAYS, ON NO LESS THAN 4 INCHES OF 3/4" MIMUS CRUSHED ROCK (COMPACTED DEPTH).
2. DRIVEWAY WIDTHS FOR MULTI-FAMILY RESIDENTIAL, COMMERCIAL AND INDUSTRIAL ARE AS FOLLOWS:

| USE | * MIN | * MAX |
|---|---|---|
| MULTI-FAMILY RESID. | 12FT | 36FT |
| COMMERCIAL | 20FT | 36FT |
| INDUSTRIAL | 20FT | 40FT |

* EXCLUDING WINGS

CITY OF TROUTDALE

# DRIVEWAY APPROACH

(MULTI-FAMILY RESIDENTIAL, COMMERCIAL/INDUSTRIAL AREAS)

DATE: UPDATED 1997

DRAWING NO. II - 12

FILENAME: APWA0129.DWG

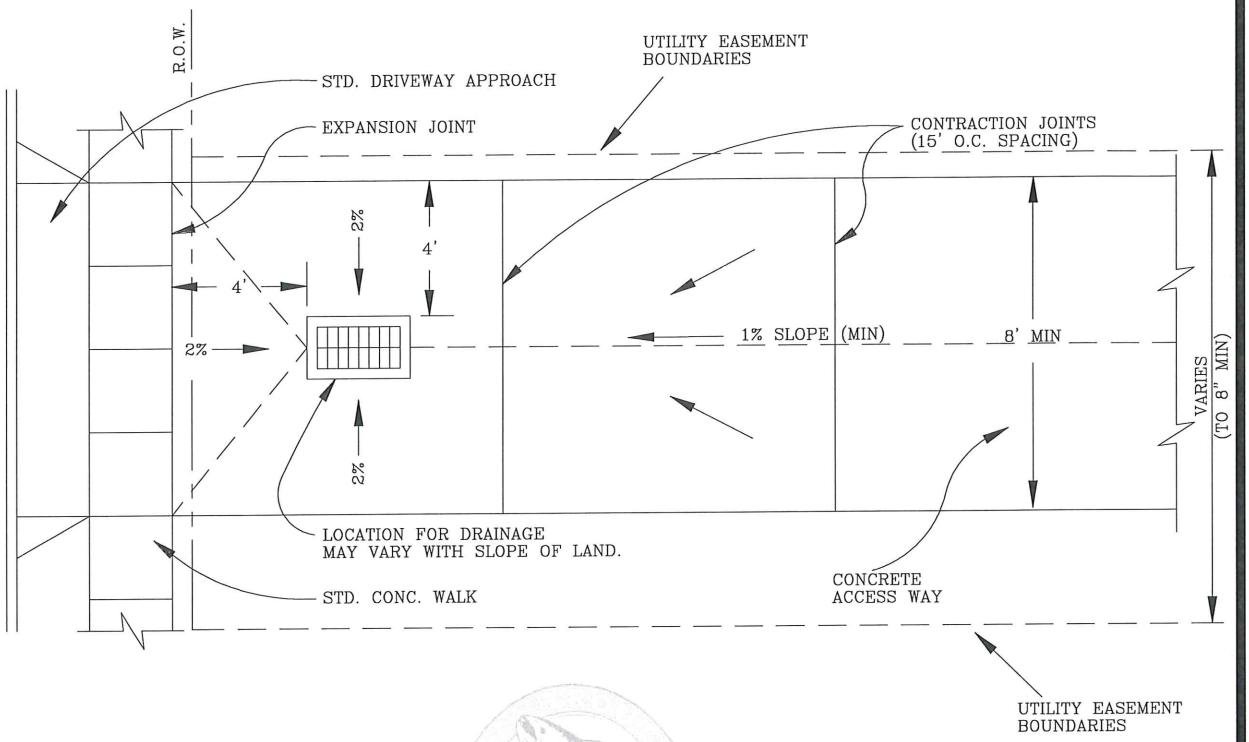


PLAN VIEW

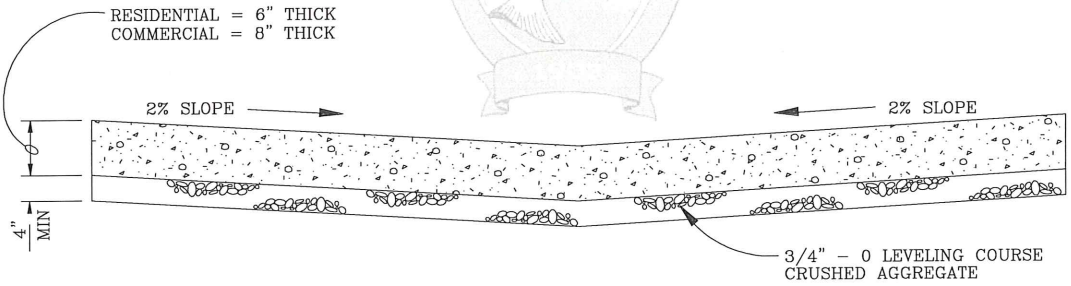


TYPICAL ACCESS WAY (INVERTED CROWN) SECTION

GENERAL NOTES:

1. ALL EDGES SHALL BE TOOLED WITH 3/4" RADIUS.
2. CONCRETE TO BE 3300 PSI @ 28 DAYS.
3. EXPANSION JOINTS SHALL BE INSTALLED @ 45' INTERVALS AND CONTRACTION JOINTS @ 15' INTERVALS.
4. ACTUAL WIDTH OF EASEMENT AND CONCRETED AREA WILL BE DETERMINED BY THE CITY.
5. SURFACES MUST BE BROOM FINISHED.

CITY OF TROUTDALE

*UTILITY EASEMENT ACCESS WAY*

| DATE: | DRAWING NO. |
|---|---|
| UPDATED 1997 | II – 13 |

FILENAME: APWA0009.DWG

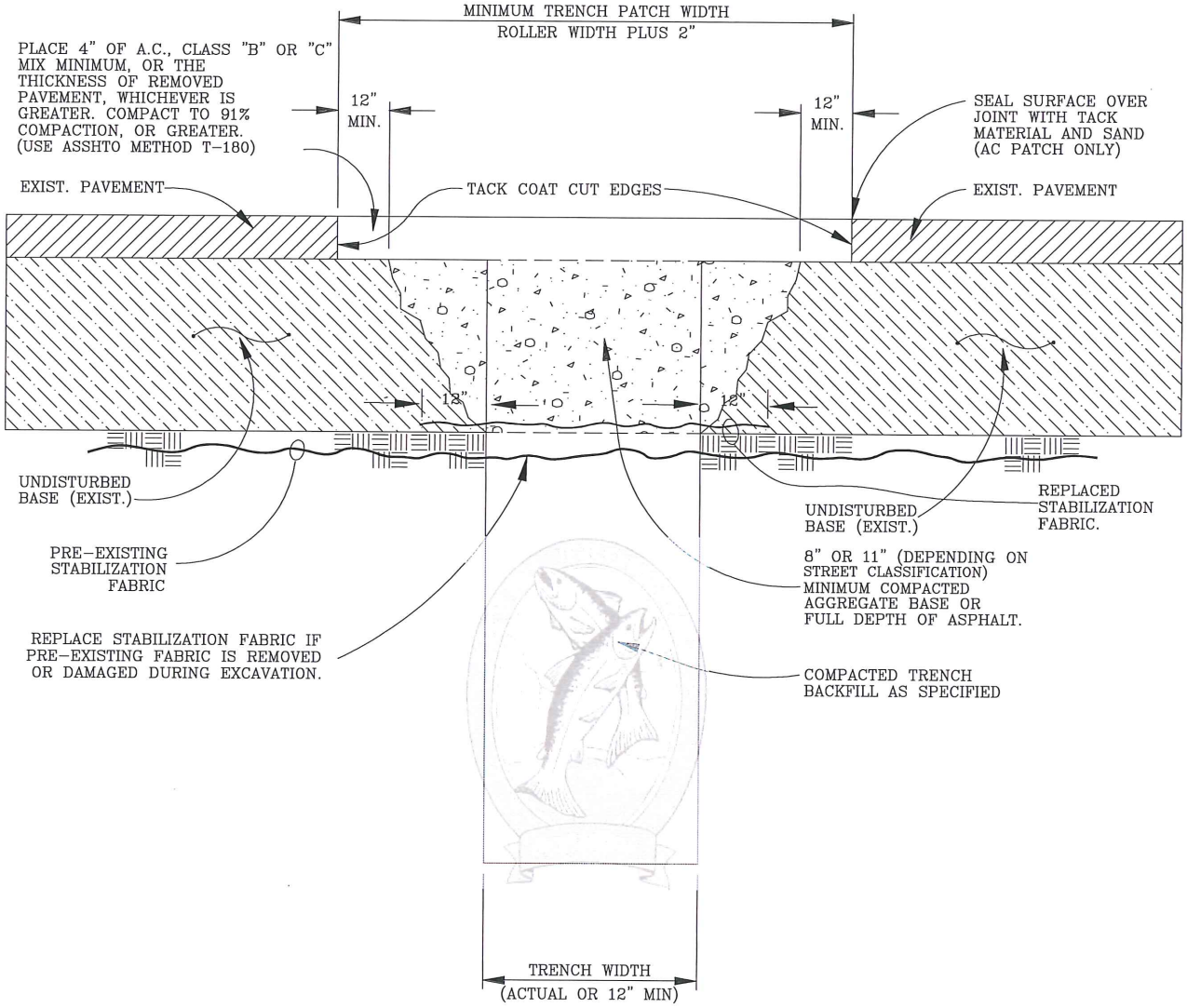


GENERAL NOTES:

1. ALL EXISTING AC OR PCC PAVEMENT SHALL BE SAWCUT PRIOR TO REPAVING, AND CUT EDGES TACKED TO PROVIDE STRONG BONDING.
2. IF STREET CUT/EXCAVATION TORE PRE-EXISTING STABILIZATION FABRIC, THE CITY MUST DETERMINE WHAT FABRIC TYPE WILL BE USED AS A SUBSTITUTE. SUBSTITUTE MUST OVERLAP ONTO EXISTING FABRIC AT LEAST 1' ON BOTH SIDES, AS SHOWN.
3. A PUBLIC WORKS PERMIT MUST BE OBTAINED FROM THE CITY PRIOR TO ANY ON-SITE EXCAVATION. A SUBMITTAL OF A TRAFFIC PLAN TO PUBLIC WORKS TO APPROVE MAY ALSO BE REQUIRED DEPENDING ON THE LOCATION OF THE CUT.

CITY OF TROUTDALE

# STREET CUT & REPAIRS

| DATE: | DRAWING NO. |
|---|---|
| UPDATED 1997 | II - 14 |

FILENAME: APWA0012.DWG

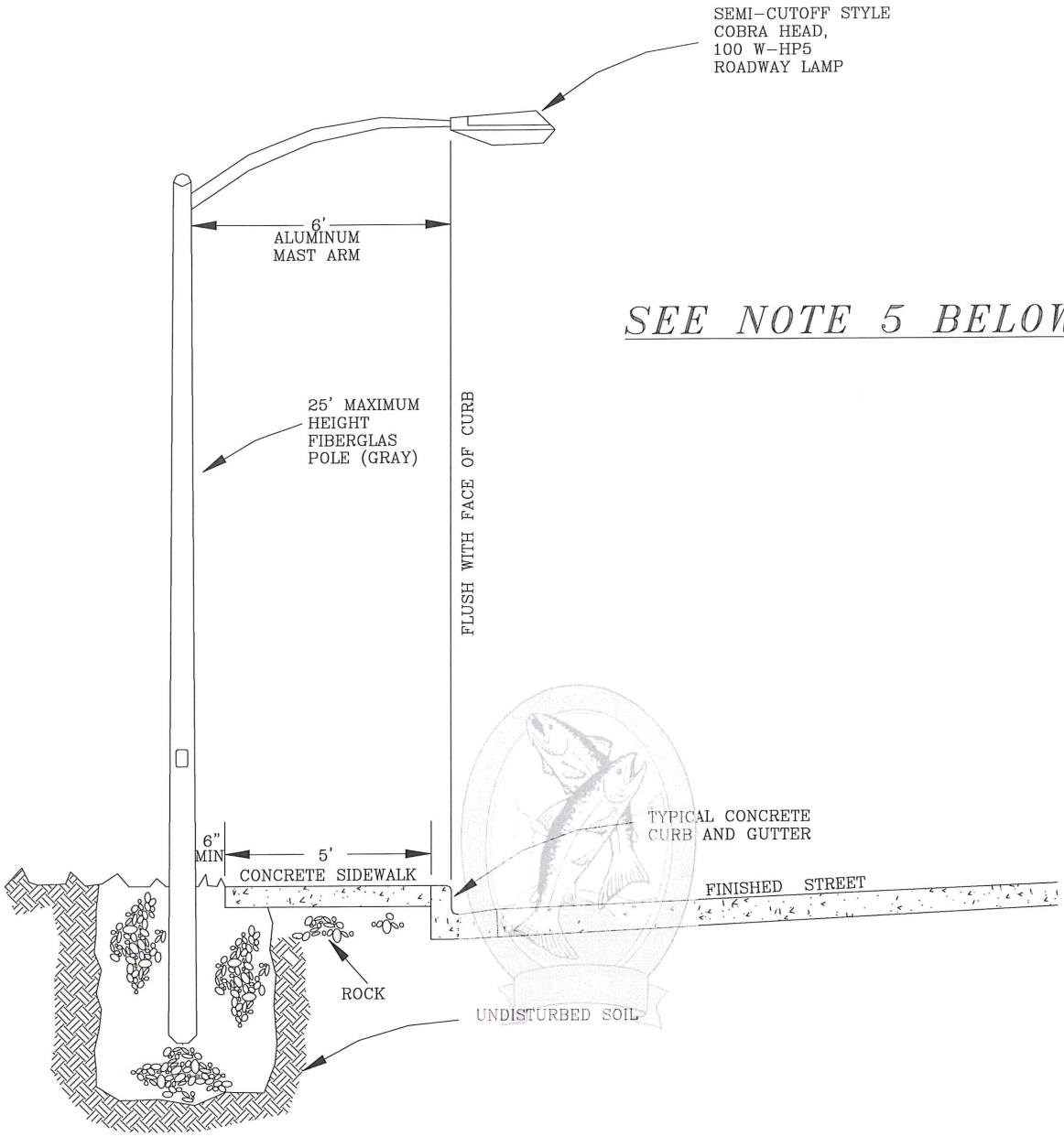


GENERAL NOTES

1. COMPACTED, CRUSHED ROCK BACKFILL IS REQUIRED IN ALL SOIL CONDITIONS TO MAINTAIN PROPER POLE VERTICAL ALIGNMENT.
2. USE BELT SLINGS OR NYLON ROPE WHEN LIFTING POLE IN PLACE TO PREVENT SCARRING.
3. LOCATION OF LIGHT POLE CAN NOT BE CLOSER THAN 5' FROM A FIRE HYDRANT; AND, NO CLOSER THAN 2' FROM THE EDGE OF A WATER METER'S BOX AND/OR WATER SAMPLING STATION'S BOX.
4. INSTALLATION OF STREET LIGHT POLE SHOULD OCCUR BEFORE SIDEWALK, OTHERWISE, A 5' X 5' SECTION OF SIDEWALK MUST BE REMOVED AND REPLACED AFTER STREET LIGHT POLE IS INSTALLED.
5. THIS DETAIL IS PROVIDED TO SHOW "LOCATION" OF POLE WITHIN PUBLIC RIGHT-OF-WAY ONLY. EXACT SPECIFICATIONS FOR INSTALLATION AND ELECTRICAL COMPONENTS MUST BE OBTAINED FROM PORTLAND GENERAL ELECTRIC.
6. COBRA HEAD STYLE USED WHEN POLE IS INSTALLED BEHIND SIDEWALK. USE SHOE BOX STYLE WHEN LOCATED ADJACENT TO CURB. SEE DRAWING # II - 16.
7. STREET LIGHT POLES SHALL NOT BE INSIDE DRIVEWAY WINGS.

CITY OF TROUTDALE

# STREET LIGHT POLE LOCATION

## (BACK OF WALK)

| DATE: | DRAWING NO. |
|---|---|
| UPDATED 1997 | II - 15 |

FILENAME: APWA0107.DWG

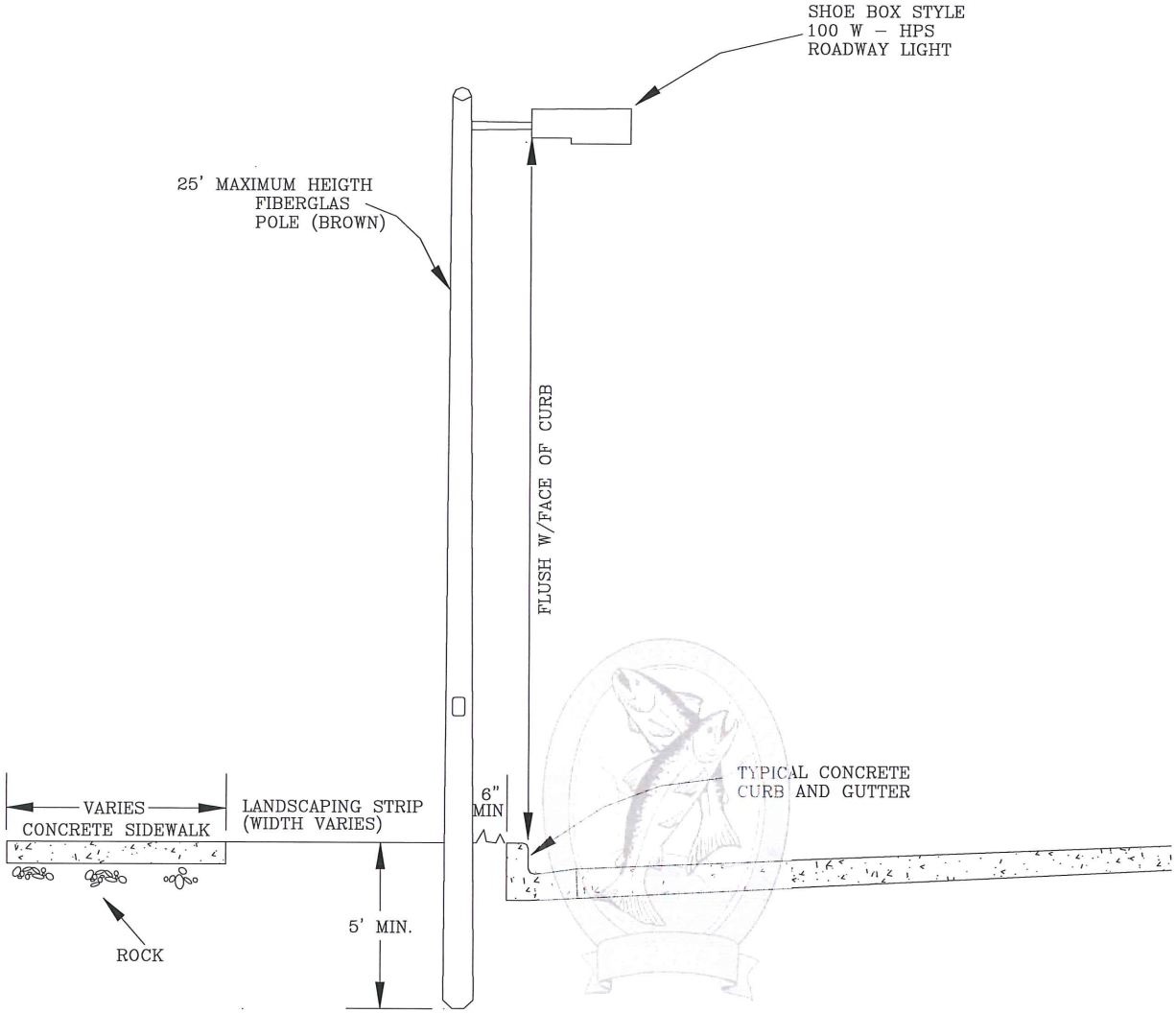


GENERAL NOTES:

1. DURING EXCAVATION, DO NOT UNDERMINE EXISTING CURB AND GUTTER.
2. COMPACTED, CRUSHED ROCK BACKFILL IS REQUIRED IN ALL SOIL CONDITIONS TO MAINTAIN PROPER POLE VERTICAL ALIGNMENT.
3. USE BELT SLINGS OR NYLON ROPE WHEN LIFTING POLE IN PLACE TO PREVENT SCARRING.
4. LOCATION OF LIGHT POLE CAN NOT BE CLOSER THAN 5' FROM A FIRE HYDRANT; AND, NO CLOSER THAN 2' FROM THE EDGE OF A WATER METER'S BOX AND/OR WATER SAMPLING STATION'S BOX. NO EXCEPTIONS ALLOWED.
5. THIS DETAIL IS PROVIDED TO SHOW "LOCATION" OF POLE WITHIN PUBLIC RIGHT–OF–WAY ONLY. EXACT SPECIFICATIONS FOR INSTALLATION AND ELECTRICAL COMPONENTS MUST BE OBTAINED FROM PORTLAND GENERAL ELECTRIC.
6. "SHOE BOX" STYLE IS USED WHEN POLE IS PLACED IN LANDSCAPING STRIP. USE COBRA HEAD STYLE WHEN LOCATED BEHIND SIDEWALK. SEE DRAWING # II – 14.
7. STREET LIGHT POLES SHALL NOT BE INSIDE DRIVEWAY WING AREA.

CITY OF TROUTDALE

# *STREET LIGHT POLE LOCATION*

*(IN LANDSCAPING STRIP)*

| DATE: | DRAWING NO. |
|---|---|
| UPDATED 1997 | II – 16 |

FILENAME: APWA0117.DWG

FILENAME: APWA0116.DWG

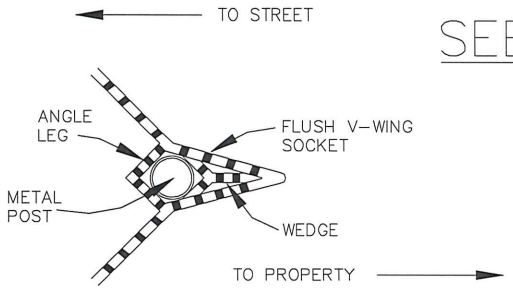


POST MOUNTING SOCKET

SEE NOTE 2 BELOW

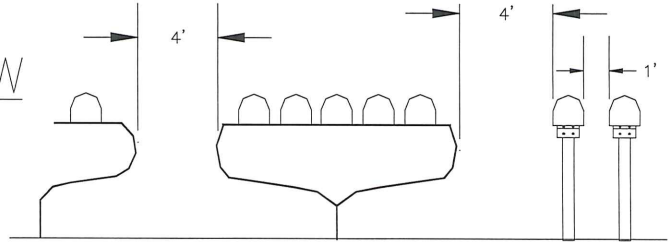


SPACING

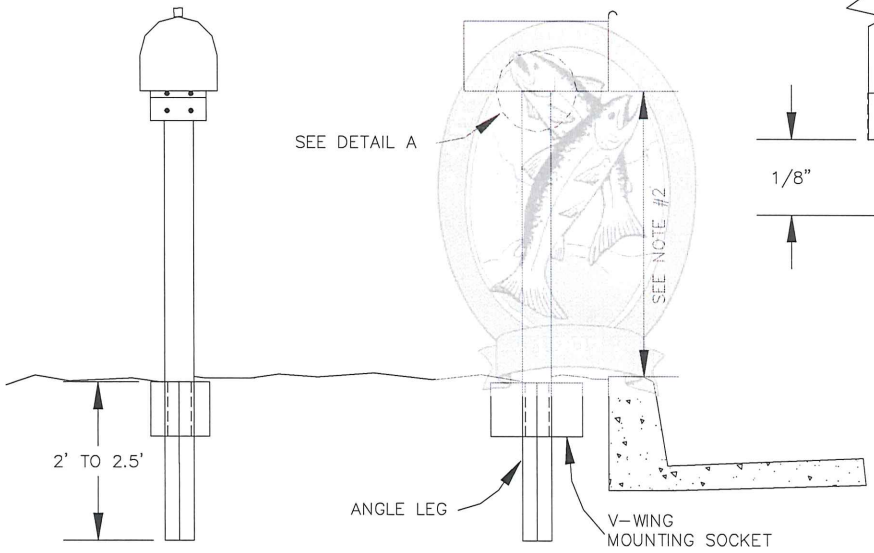


FRONT

SIDE

SINGLE BOX

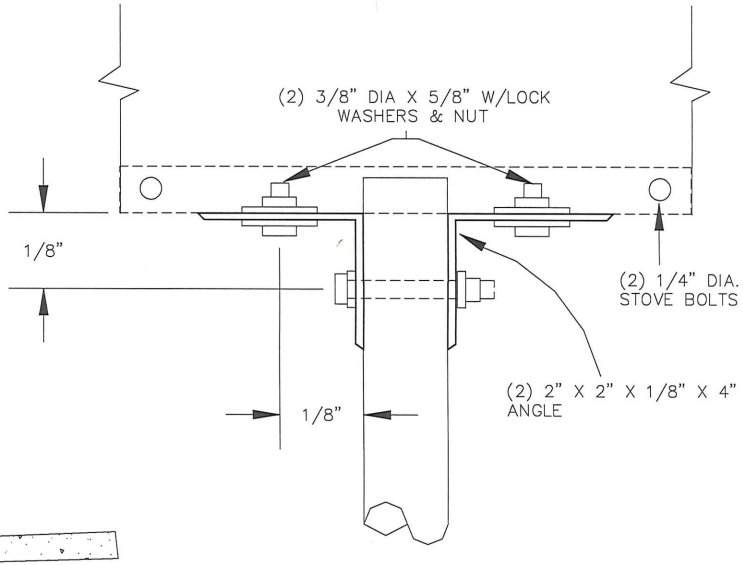


DETAIL A

GENERAL NOTES:

1. TOP OF V-LOC SOCKET MUST BE FLUSH WITH FINISH GRADE. IF MAILBOX IS BEING INSTALLED IN SIDEWALK AREA, IT MUST BE INSTALLED DURING PREP WORK OF SIDEWALK BEDDING, AND PRIOR TO POURING CONCRETE.
2. MAIL BOX HEIGHT AND SET BACKS WILL BE SPECIFIED BY POSTAL AUTHORITIES. **IT IS THE RESPONSIBILITY OF THE CONTRACTOR TO OBTAIN THE MOST RECENT SPECIFICATIONS FROM THE POSTAL AUTHORITIES.**

CITY OF TROUTDALE

*MAIL BOX INSTALLATIONS (CLUSTER & SINGLE)*

DATE: UPDATED 1997

DRAWING NO. II - 17

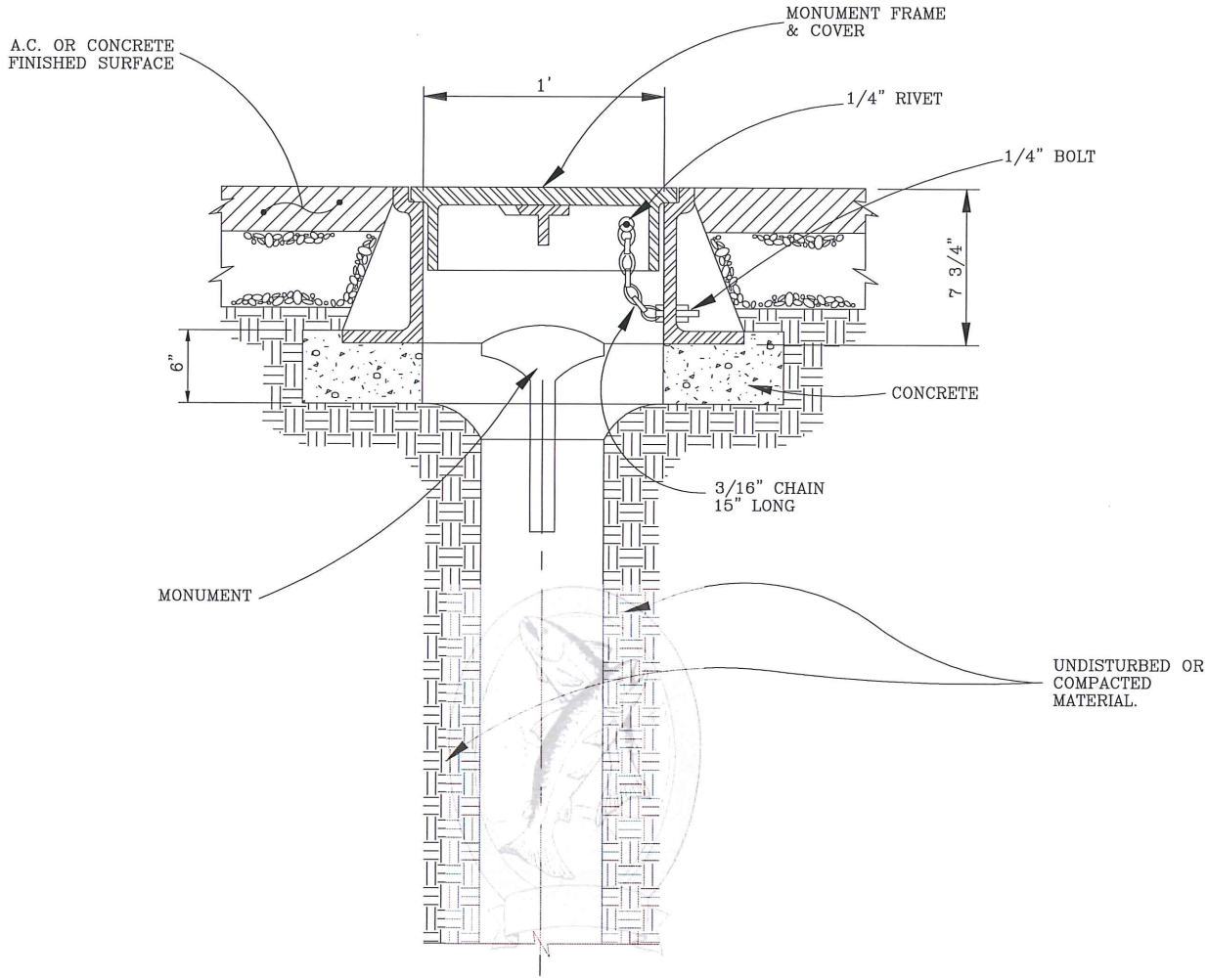


ELEVATION

GENERAL NOTES:

1. CONCRETE SHALL BE 3000 PSI @ 28 DAYS.
2. FRAME AND COVER SHALL BE CAST IRON.
3. COVER SHALL HAVE "MONUMENT DO NOT DISTURB" CAST INTO TOP.
4. MONUMENT TO BE 2" DIAMETER BRASS CAP MARKER OR AS APPROVED BY THE CITY, AND/OR THE COUNTY SURVEYOR.
5. ALL ON-SITE STREET MONUMENTATION FOR CONTROL POINTS (AS REQUIRED BY MULTNOMAH COUNTY) MUST BE IN PLACE BEFORE THE CITY ISSUES A CERTIFICATE OF COMPLETION.
6. MONUMENT BOXES MUST BE SET TO THE FINISHED GRADE OF THE 2ND LIFT OF ASPHALT.

CITY OF TROUTDALE

*SURVEY MONUMENT & BOX*

| DATE: | DRAWING NO. |
|---|---|
| UPDATED 1997 | II – 18 |

FILENAME: APWA0014.DWG

SEE NOTE 5 BELOW

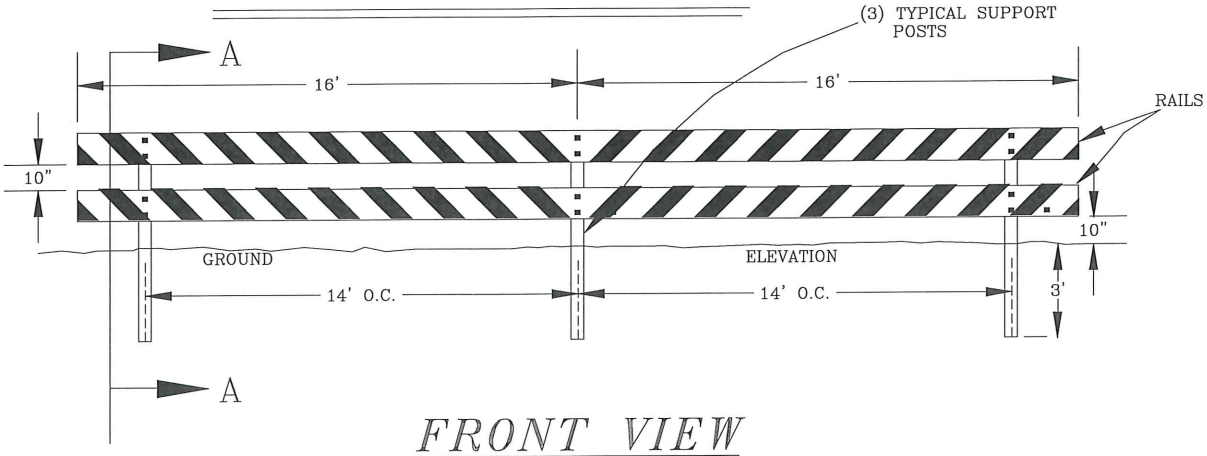


## *FRONT VIEW*

*(TEMPORARY CLOSURE)*

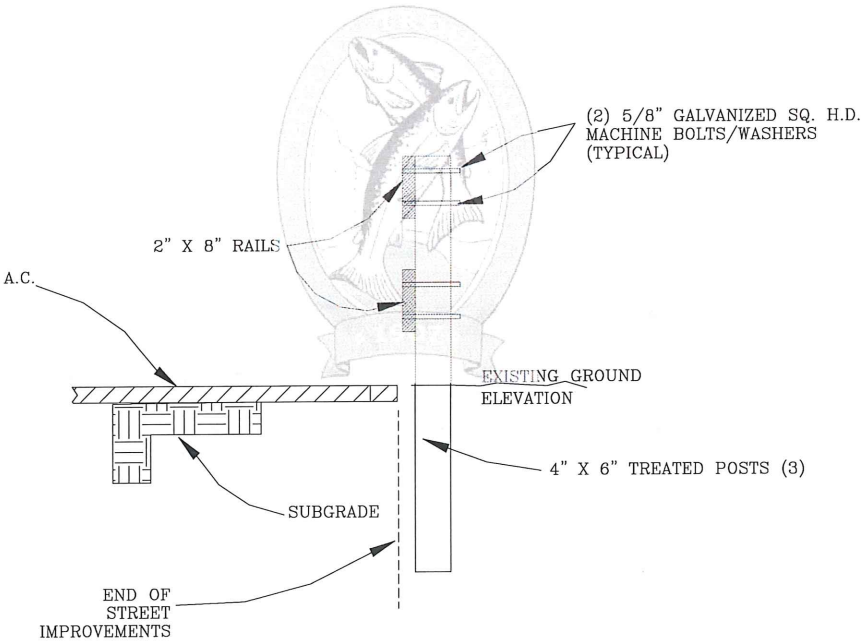


## *SIDE VIEW*

GENERAL NOTES:

1. STRIPES SHALL BE REFLECTORIZED, RED AND WHITE IN COLOR.
2. SUPPORT POSTS SHALL BE 4"X6", PRESSURE TREATED AND PAINTED WHITE.
3. BARRICADE BOARD RAILS SHALL BE 2"X8" X REQUIRED LENGTH, PRESSURE TREATED.
4. WHEN BARRICADE REMOVAL IS REQUIRED TO EXTEND STEET, CITY FORCES WILL PICK UP BARRICADE UPON REMOVAL BY CONTRACTOR.
5. CONSTRUCT BARRICADE TYPE II, AS SHOWN, UNLESS OTHERWISE DIRECTED BY THE CITY.

| | |
|---|---|
| CITY OF TROUTDALE | |
| *STREET BARRICADE (TYPE II)* | |
| DATE: UPDATED 1997 | DRAWING NO. II – 19 |

FILENAME: APWA0104.DWG

# SEE NOTE 4 BELOW

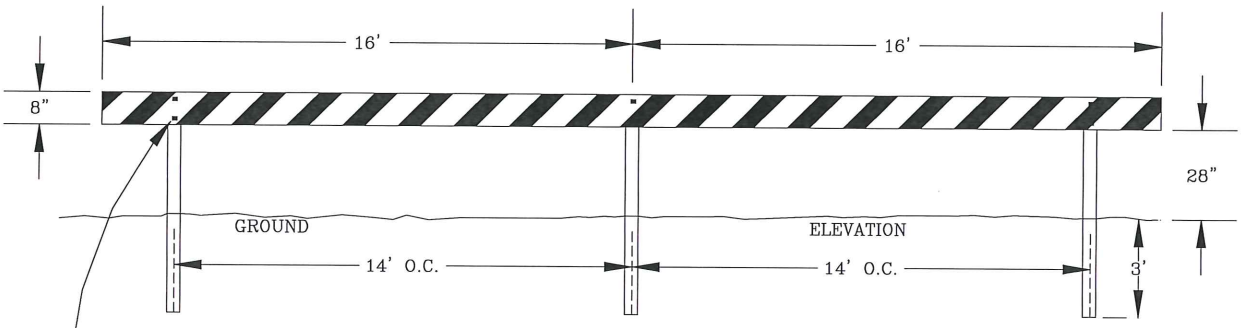


## *BARRICADE TYPE I*

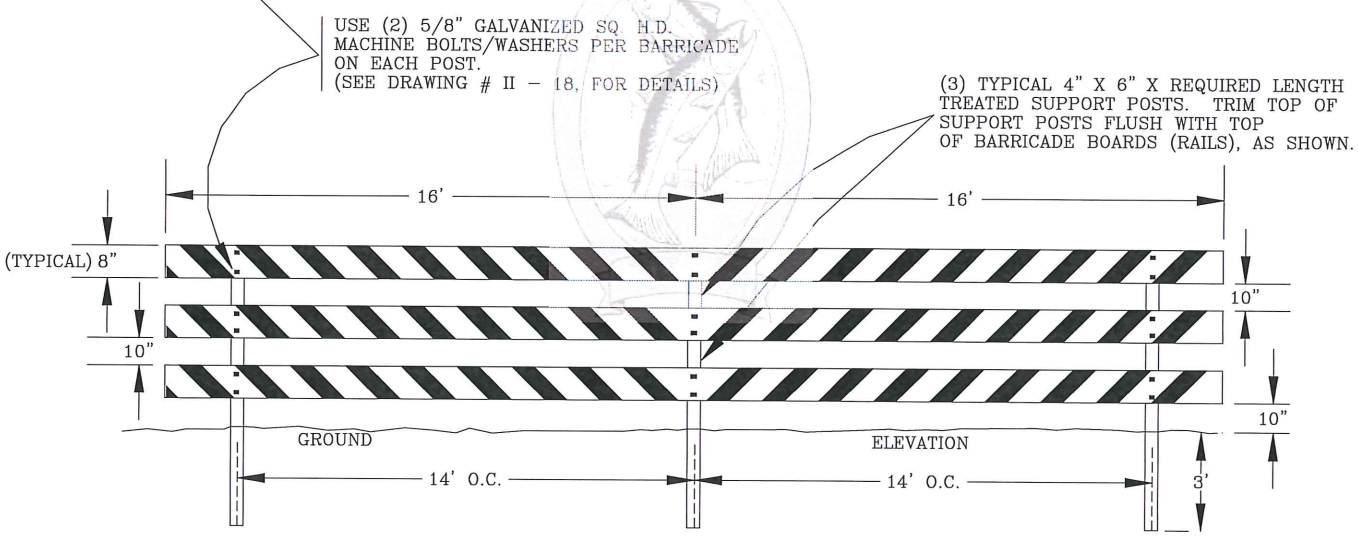


## *BARRICADE TYPE III*

*(PERMANENT CLOSURE)*

GENERAL NOTES:

1. STRIPES SHALL BE REFLECTORIZED, RED AND WHITE IN COLOR.
2. POSTS SHALL BE 4" X 6" X REQUIRED LENGTH, TREATED, PAINTED WHITE.
3. BARRICADE BOARDS, (RAILS), SHALL BE 2"X8" X REQUIRED LENGTH, TREATED.
4. USE TYPE II, DRAWING # II–19, UNLESS OTHERWISE REQUIRED BY THE CITY.

| | |
|---|---|
| CITY OF TROUTDALE | |
| *STREET BARRICADE (TYPE I & III)* | |
| DATE: UPDATED 1997 | DRAWING NO. II – 20 |

FILENAME: APWA0105.DWG

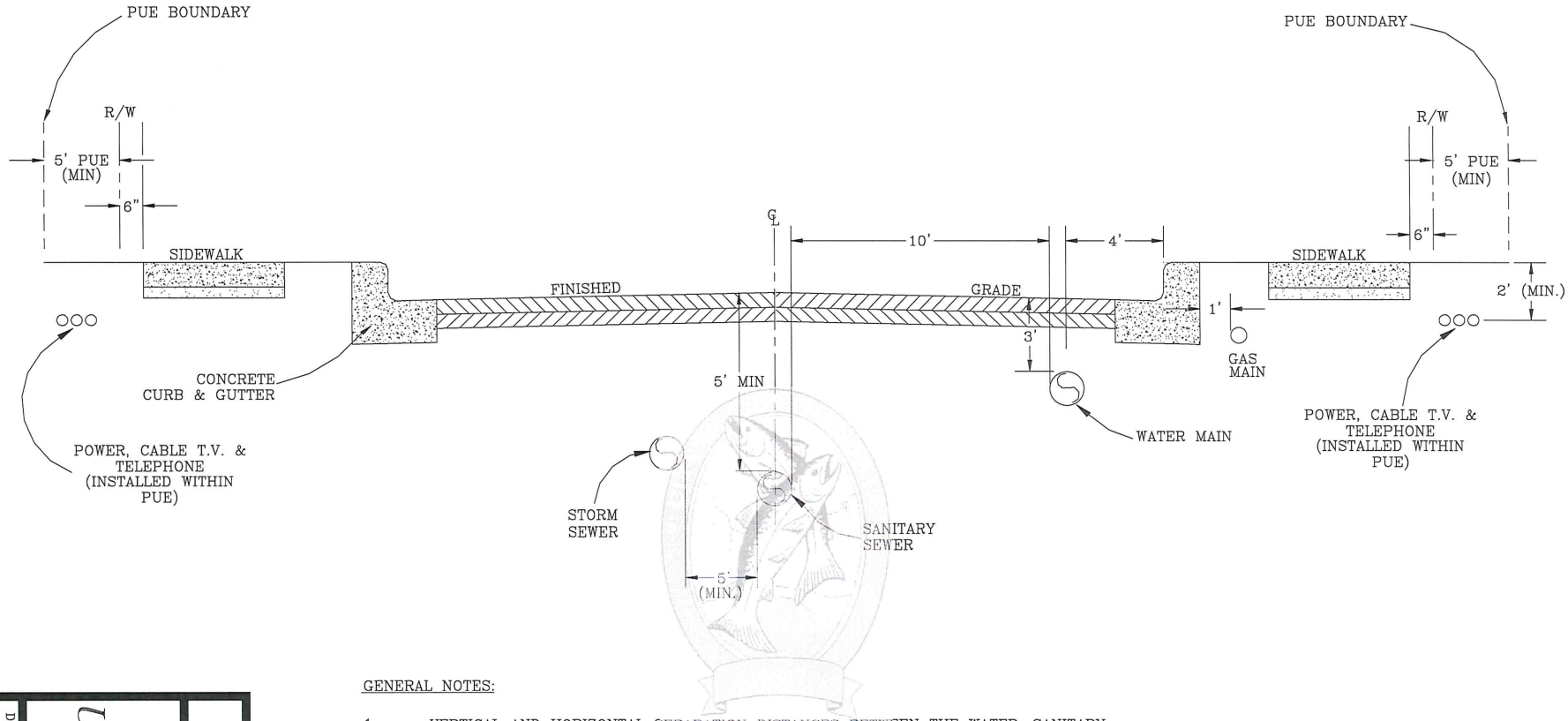


GENERAL NOTES:

1. VERTICAL AND HORIZONTAL SEPARATION DISTANCES BETWEEN THE WATER, SANITARY AND STORM SEWERS ARE GOVERNED BY THE CITY, THE DEPARTMENT OF ENVIROMENTAL QUALITY, AND STATE HEALTH DIVISION.
2. PUE: PRIVATE UTILITY EASEMENT
3. WATER MAINS SHALL BE LOCATED ON THE SOUTH & EAST SIDE OF THE STREETS WHERE POSSIBLE.
4. STORM SEWER MAINS SHALL BE LOCATED ON THE NORTH & WEST SIDE OF THE STREETS WHERE POSSIBLE.
5. SANITARY SEWER MAINS SHALL BE LOCATED ALONG THE CENTER LINE OF THE STREETS, WHEREVER POSSIBLE. AT POINTS OF STREET INTERSECTIONS, CURVATURES AND TANGENTS, THE SANITARY SEWER MANHOLES CAN BE PLACED SLIGHTLY OFF STREET CENTER LINES WHEN & IF SURVEY CONTROL POINTS ARE REQUIRED.

CITY OF TROUTDALE

PUBLIC/PRIVATE UTILITY LOCATIONS

DATE: UPDATED 1997

DRAWING NO. II - 21

FILENAME: APWA0103.DWG

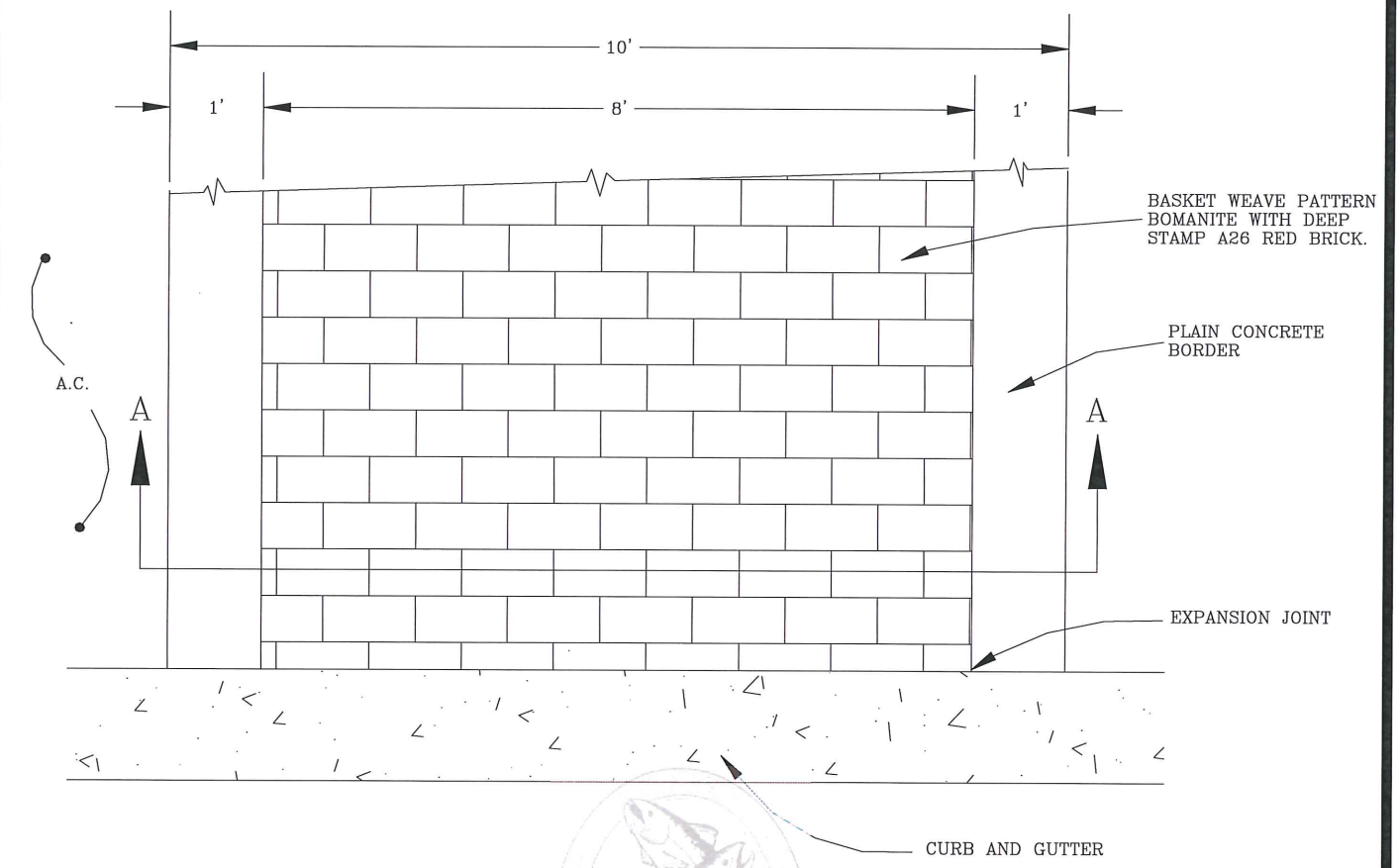


## PLAN VIEW

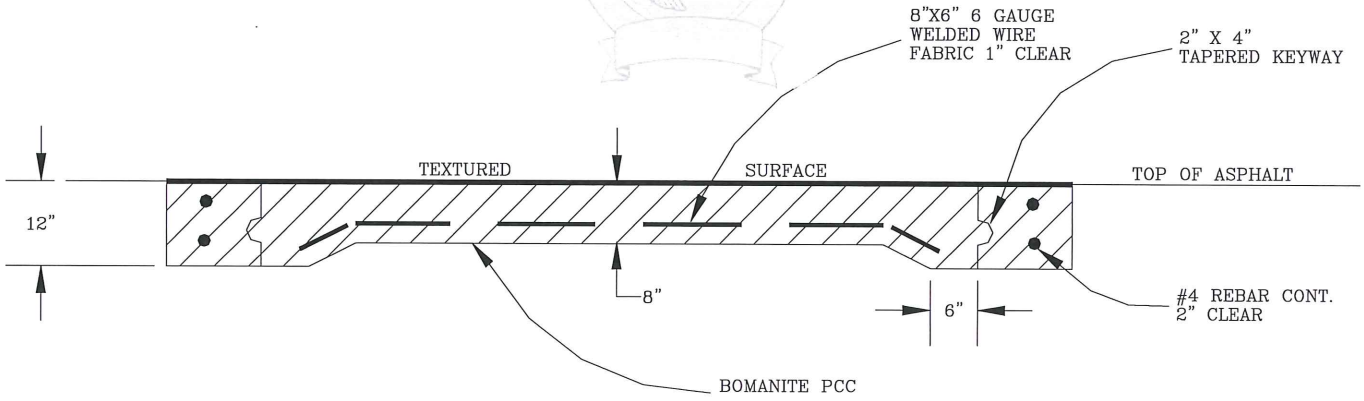


## SECTION A–A

GENERAL NOTES

1. ALL CONCRETE SHALL BE 4000 PSI AT 28 DAYS. PROVIDE 1/2" EXPANSION JOINT AT CENTER OF CROSSWALK OR AT 15' O.C., WHICHEVER IS LESS.
2. BOMANITE CROSS WALKS ARE REQUIRED AT ALL CROSSINGS NEAR SCHOOLS. EXACT LOCATION IS TO BE DETERMINED BY THE CITY.

CITY OF TROUTDALE

# BOMANITE PEDESTRIAN CROSS WALK

| DATE: | DRAWING NO. |
|---|---|
| UPDATED 1997 | II – 22 |

FILENAME: APWA0118.DWG

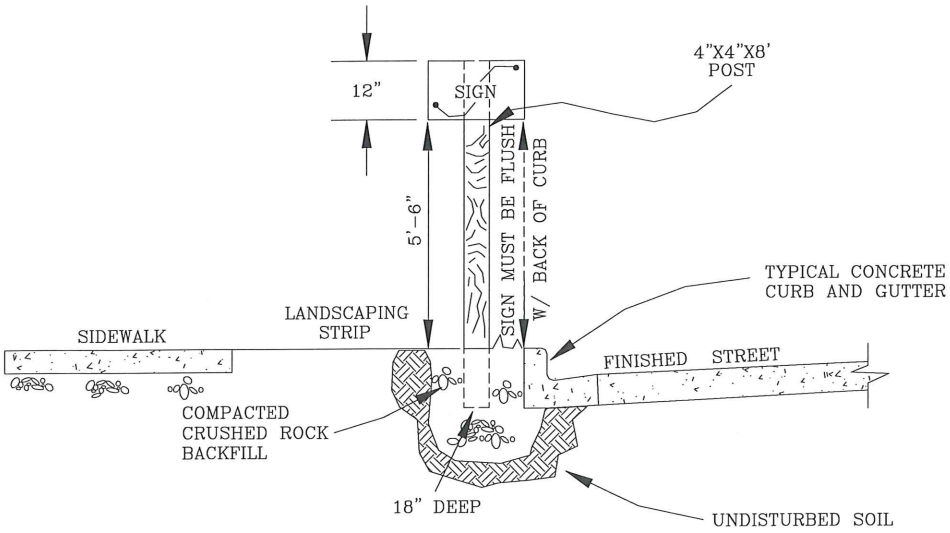


## BACK OF CURB OPTION

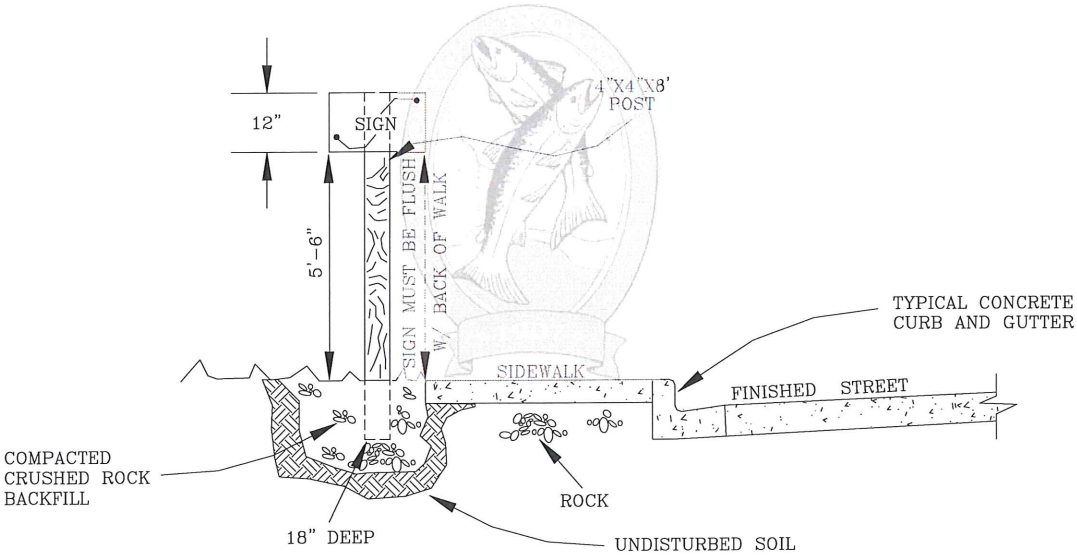


## BACK OF SIDEWALK OPTION

GENERAL NOTES:

1. DURING EXCAVATION, DO NOT UNDERMINE EXISTING CURB AND GUTTER.
2. COMPACTED, CRUSHED ROCK BACKFILL IS REQUIRED IN ALL SOIL CONDITIONS TO MAINTAIN PROPER POLE VERTICAL ALIGNMENT.
3. LOCATION OF SIGN & POST CAN NOT BE CLOSER THAN 5' FROM A WATER SERVICE METER BOX, FIRE HYDRANT, OR WATER SAMPLING STATION. NO EXCEPTIONS ALLOWED.
4. A UTILITY LOCATE REQUEST MUST BE MADE BY THE PROPERTY OWNER(S) PRIOR TO EXCAVATION.
5. THE INSTALLATION AND THE REQUIRED MAINTENANCE ARE THE RESPONSIBILITY OF THE NEIGHBORHOOD WATCH ASSOCIATION. PRIOR TO INSTALLATION, THE PERSON IN CHARGE OF INSTALLATION MUST CONTACT THE PUBLIC WORKS DEPARTMENT TO ENSURE LOCATION OF SIGN IS ACCEPTABLE.
6. NEIGHBORHOOD WATCH SIGNS CAN NOT BE POSTED ON ALREADY IN-PLACE POSTS HOLDING STREET SIGNS, STOP SIGNS, ETC.

CITY OF TROUTDALE

# *NEIGHBORHOOD WATCH SIGNS*

| DATE: | DRAWING NO. |
|---|---|
| UPDATED 1997 | II - 23 |

FILENAME: APWA0130.DWG

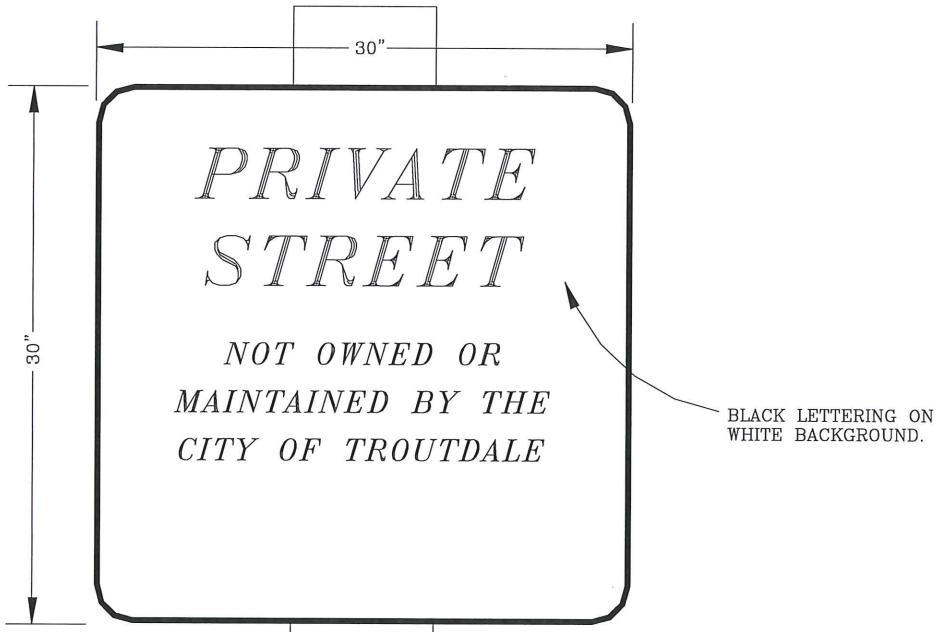


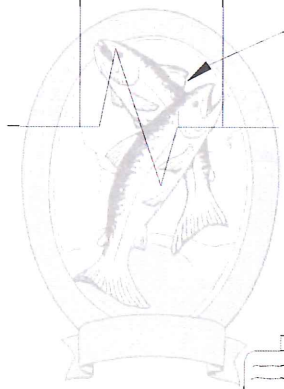


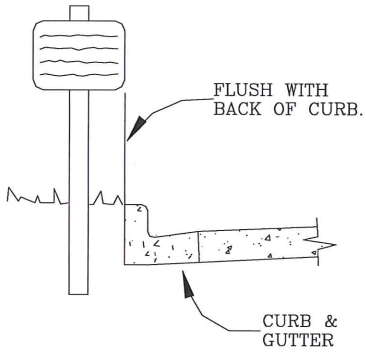


IN LANDSCAPING STRIP

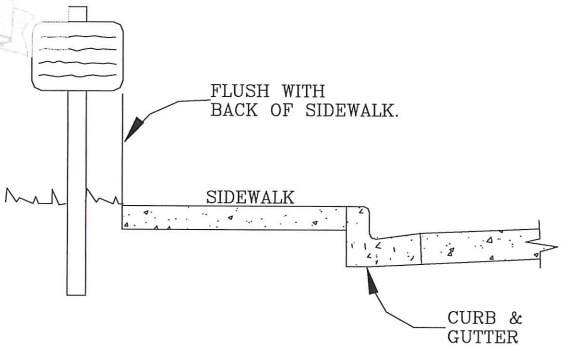


BACK OF WALK

GENERAL NOTES

1. SIGN TO BE INSTALLED IN THE PUBLIC RIGHT-OF-WAY AT ALL ENTRANCES TO ANY PRIVATELY OWNED STREET(S).
2. INSTALLATION OF THESE AND ALL OTHER STREET SIGNS IN PUBLIC RIGHT-OF-WAY ARE TO BE INSTALLED BY CITY FORCES; HOWEVER, @ THE EXPENSE OF THE DEVELOPER OF THE DEVELOPMENT TRIGGERING THE NEED.
3. THE STREET EDGE OF THE SIGN IS TO BE FLUSH WITH THE BACK OF CURB OR SIDEWALK.

| | |
|---|---|
| CITY OF TROUTDALE | |
| "PRIVATE STREET" SIGN | |
| DATE: APRIL 1997 | DRAWING NO. II-24 |

FILENAME: APWA0136.DWG

SEE NOTE 2 BELOW

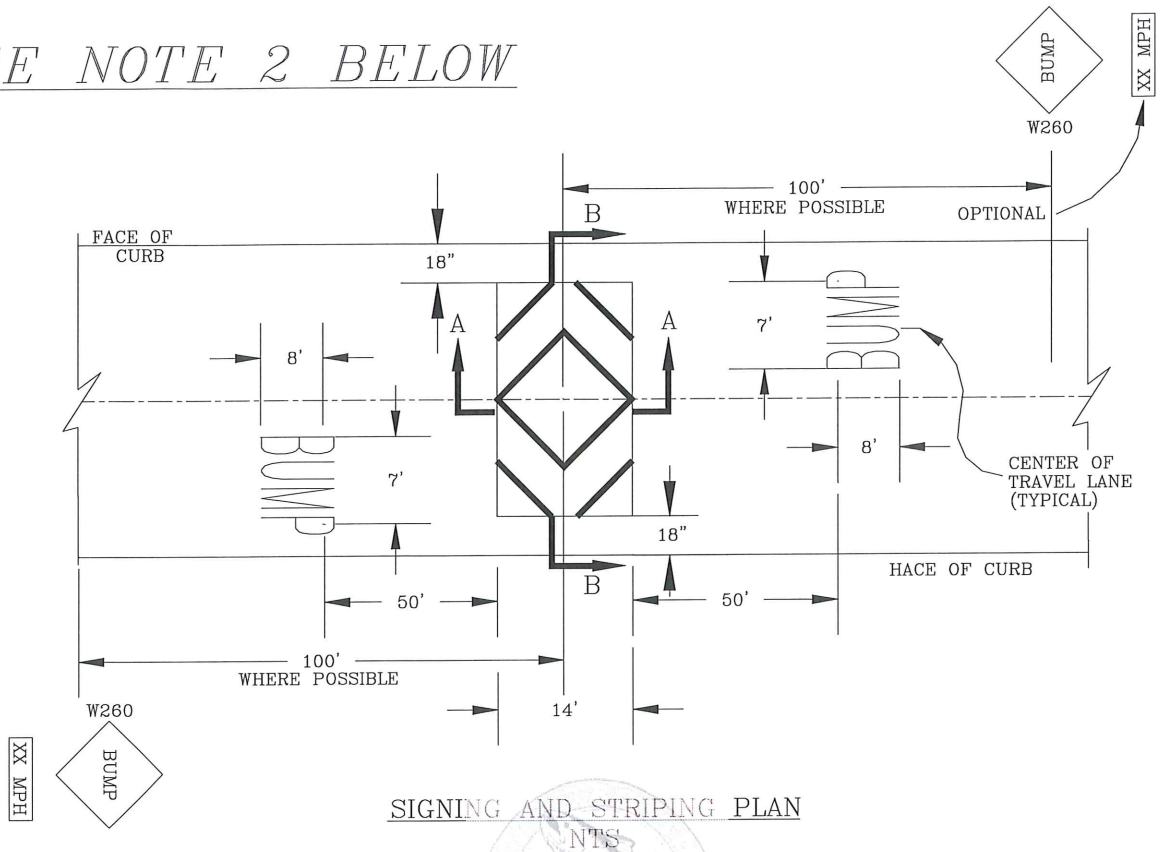


SIGNING AND STRIPING PLAN
NTS

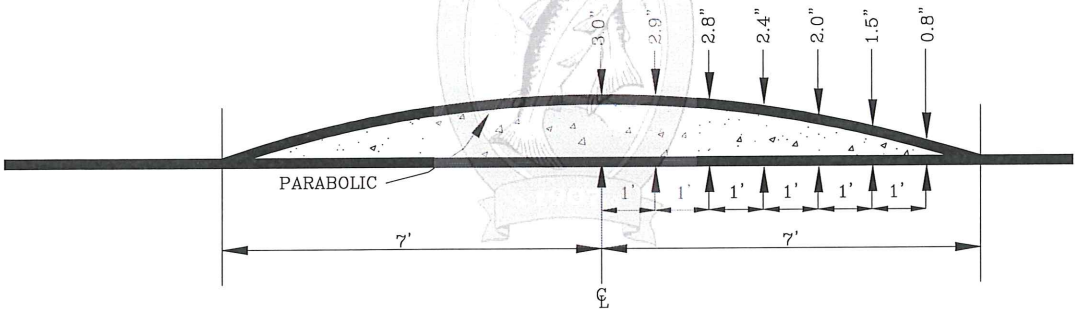


SECTION A–A
NTS

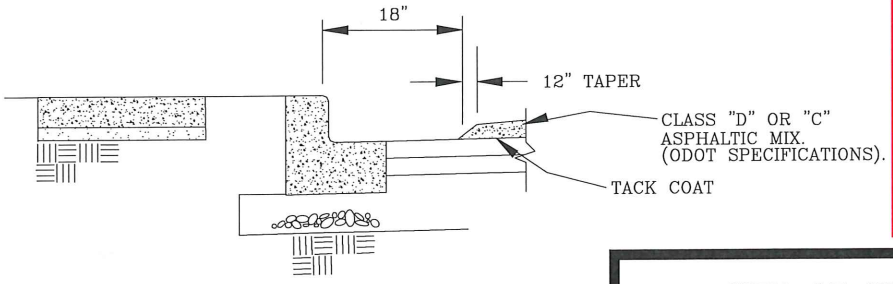


SECTION B–B
NTS

Drawing replaced with revised standard drawing 9/20/16 - see IC# 31

GENERAL NOTES

1. SPEED HUMPS SHOULD BE SPACED ACCORDING TO AN ENGINEERING EVALUATION OF THE PHYSICAL STREET SECTION AS WELL AS TRAFFIC OPERATIONS DATA. TYPICALLY, SPEED HUMPS SHOULD BE SPACED BETWEEN 300 AND 600 FEET.
2. ALL SPEEDHUMPS MUST BE FORMED WITH A PRE–MADE TEMPLATE TO ENSURE CONSISTENCY OF CONSTRUCTION FOR DEPTH AND SHAPE. TEMPLATE MUST BE INSPECTED BY CITY FORCES BEFORE PLACEMENT OF HUMPS.
3. AMBIENT TEMPERATURE MUST BE NO LESS THAN 55 DEG. F. DURING PLACEMENT OF HUMPS.

CITY OF TROUTDALE

# 14' WIDE SPEED HUMP

| DATE: | DRAWING NO. |
|---|---|
| UPDATED 1997 | II–25 |

FILENAME: APWA0132.DWG

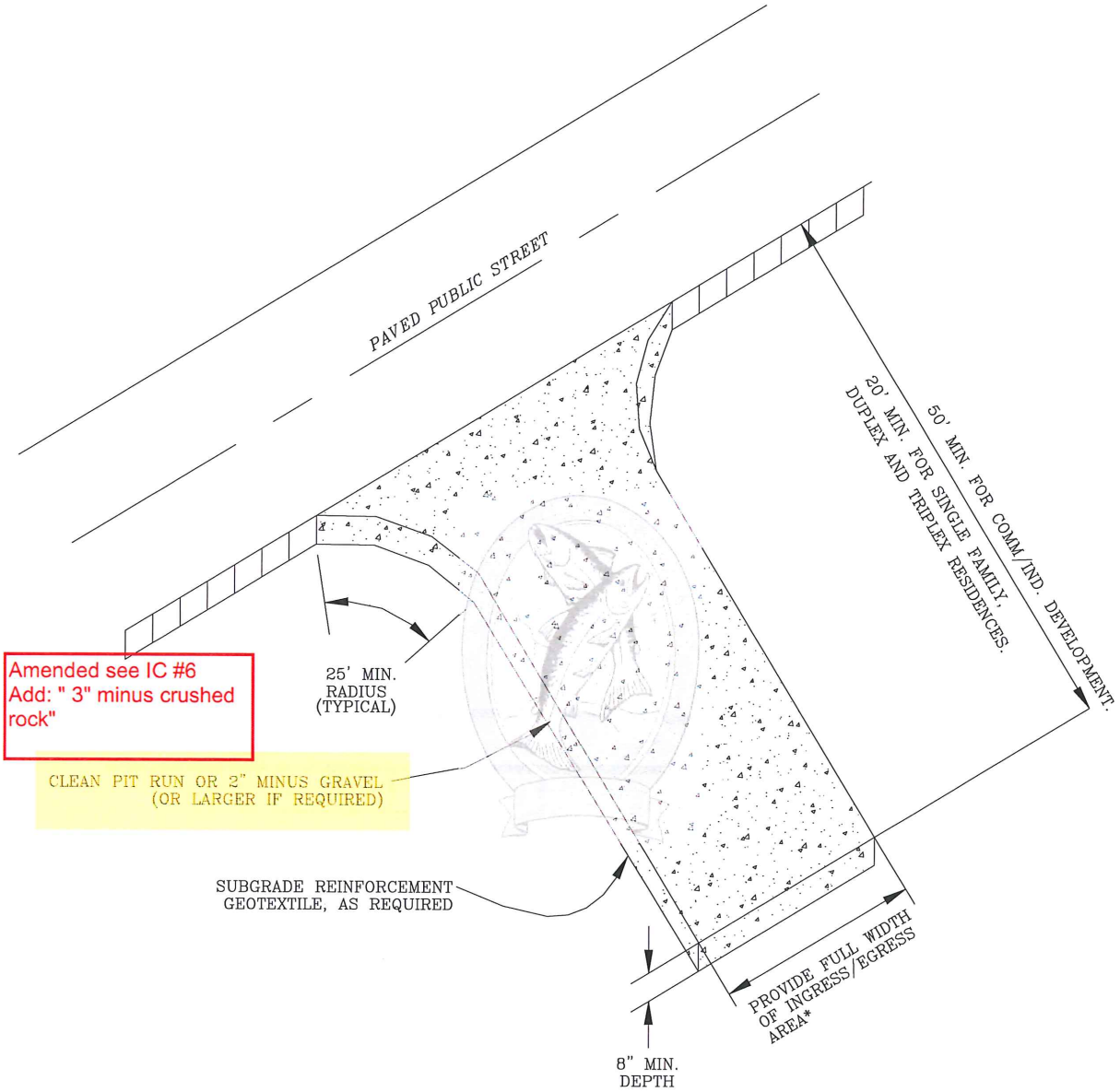


Amended see IC #6
Add: " 3" minus crushed rock"

GENERAL NOTES

1. A CONSTRUCTION ENTRANCE MUST BE PROVIDED AT ANY CONSTRUCTION SITE WHERE TRAFFIC WILL BE LEAVING THE SITE AND MOVING DIRECTLY ONTO PUBLIC ROADS OR OTHER PAVED AREAS.

2. ADDITIONAL GRAVEL, (OR LARGER CRUSHED ROCK AS REQUIRED) MAY HAVE TO BE ADDED PERIODICALLY TO MAINTAIN PROPER FUNCTION OF THE PAD.

CITY OF TROUTDALE

# GRAVEL CONSTRUCTION ENTRANCE

| DATE: | DRAWING NO. |
|---|---|
| UPDATED 1997 | II-26 |

FILENAME: APWA0133.DWG

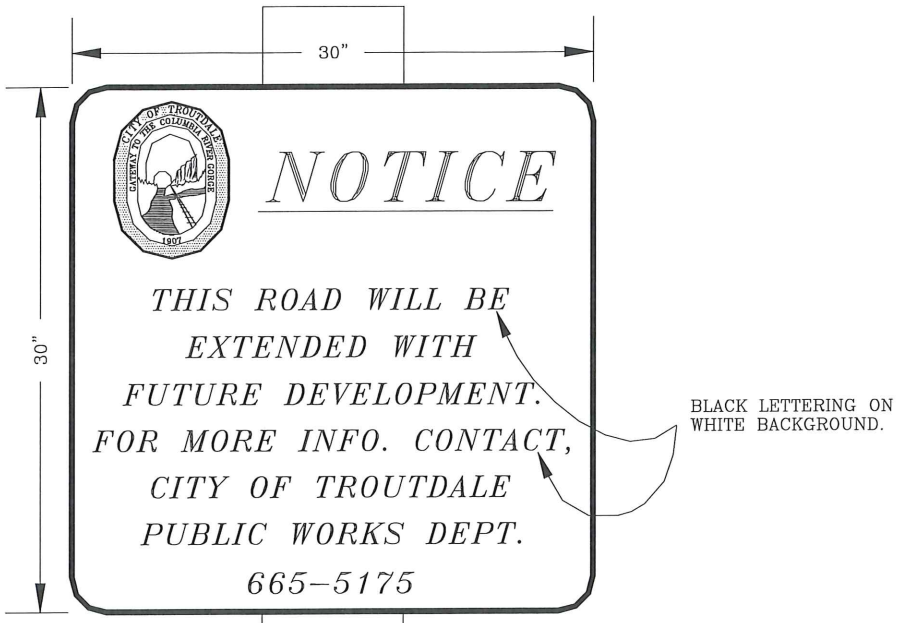


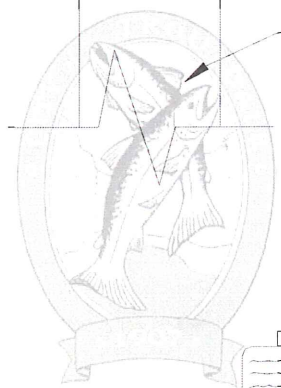

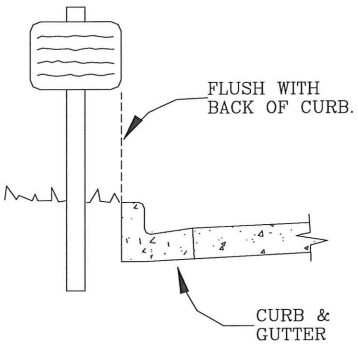


IN LANDSCAPING STRIP

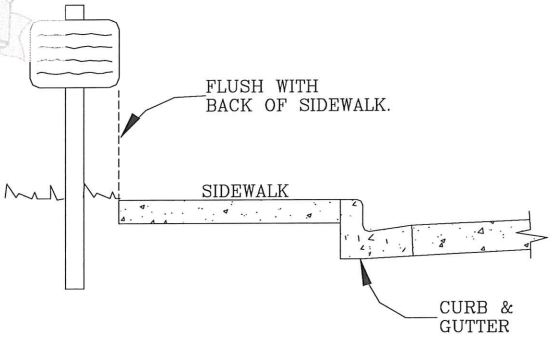


BACK OF WALK

GENERAL NOTES

1. WHENEVER A STUB STREET IS CREATED, A SIGN AS DEPICTED ABOVE MUST BE CONSTRUCTED AND INSTALLED ON OR NEAR THE BARRICADE AT THE END OF THE STUB STREET.
2. INSTALLATION OF THESE AND ALL OTHER STREET SIGNS IN PUBLIC RIGHT-OF-WAY ARE TO BE INSTALLED BY CITY FORCES; HOWEVER, @ THE EXPENSE OF THE DEVELOPER OF THE DEVELOPMENT TRIGGERING THE NEED.
3. THE STREET EDGE OF THE SIGN IS TO BE FLUSH WITH THE BACK OF CURB OR SIDEWALK.

CITY OF TROUTDALE

*NOT A "PERMANENT DEAD-END STREET" SIGN*

| DATE: | DRAWING NO. |
|---|---|
| APRIL 1997 | II-27 |

FILENAME: APWA0135.DWG

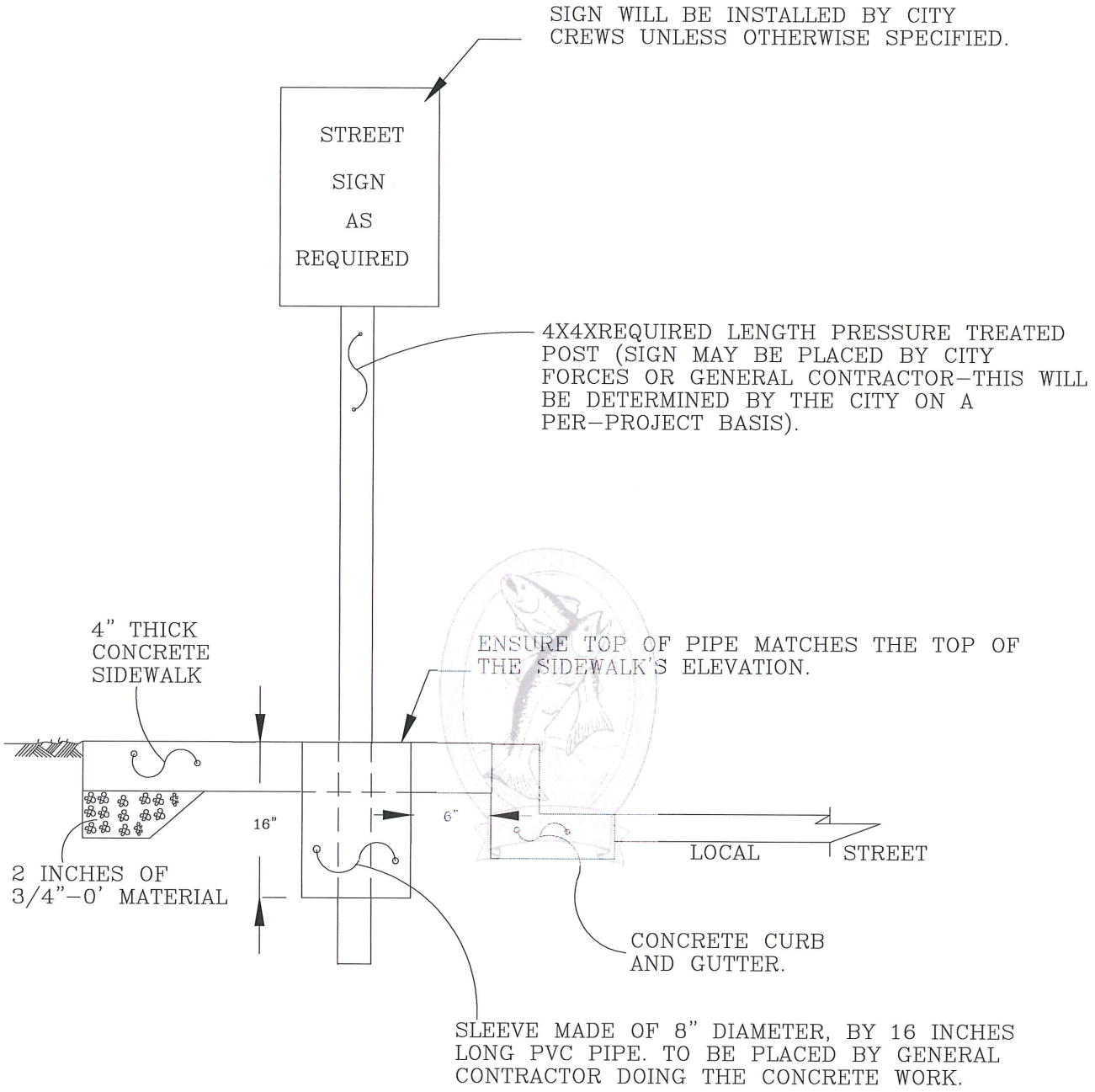


NOTES:

1. 4X4XREQUIRED LENGTH PRESSURE TREATED POST AND STREET SIGN(S) WILL BE INSTALLED BY CITY FORCES UNLESS OTHERWISE INDICATED ON A PER–PROJECT BASIS.
2. 8" DIAMETER PVC PIPE BY 16 INCHES LONG SLEEVE IS TO BE INSTALLED BY THE GENERAL CONTRACTOR PLACING THE CONCRETE.
3. THE SLEEVE MUST BE @ 16 INCHES AWAY FROM THE EDGE OF THE WHEEL CHAIR RAMP.

| CITY OF TROUTDALE | |
|---|---|
| IN–CONCRETE SIDEWALK<br>STREET SIGN SLEEVE DETAIL | |
| DATE:<br>UPDATED 1997 | DRAWING NO.<br>II – 28 |

FILENAME: APWA0142.DWG

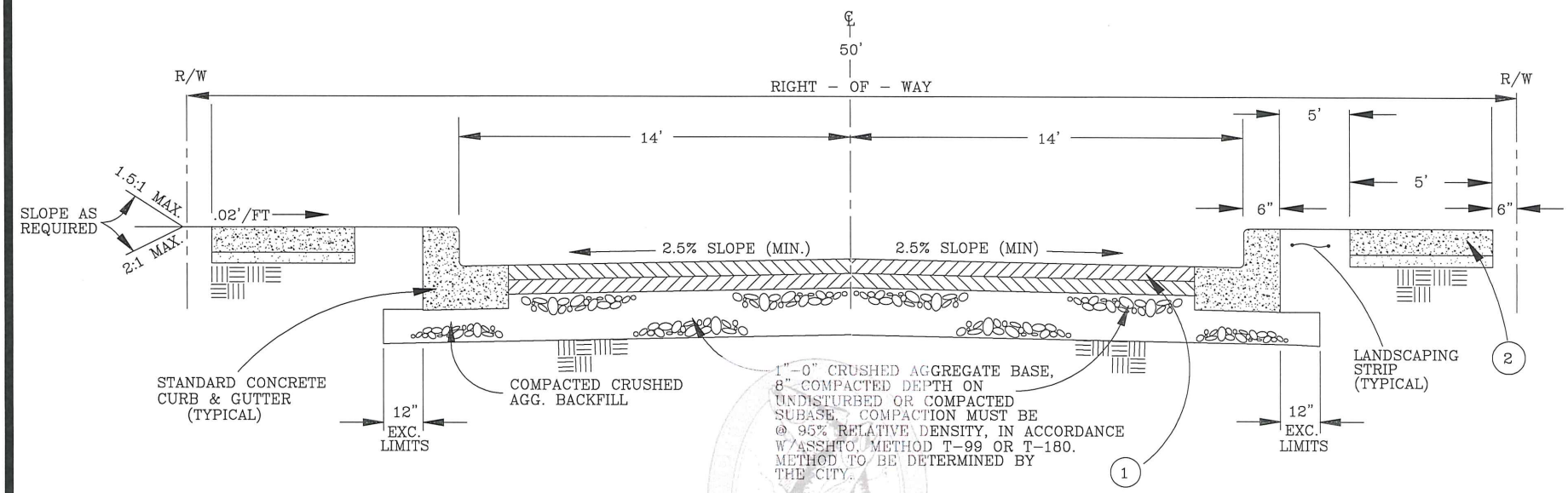


# TOWN CENTER OVERLAY DISTRICT CROSS SECTION

NOTES:

(1) 3 1/2" OF ASPHALTIC CONCRETE CLASS "C" PLACED IN 2 LIFTS. 1ST LIFT SHALL BE 2" COMPACTED DEPTH. FINAL 1 1/2" LIFT WILL BE PLACED AFTER 90% OF THE CERTIFICATES OF OCCUPANCY HAVE BEEN ISSUED OR 2 YEARS AFTER THE FIRST LIFT, WHICHEVER COMES FIRST.

(2) 4" THICK CONCRETE SIDEWALK ON MINIMUM OF 2" COMPACTED DEPTH OF 3/4" - 0 CRUSHED ROCK.

GENERAL:

1. THESE STANDARDS ARE SHOWN AS MINIMUM ALLOWABLE STANDARDS. THE CITY ENGINEER MAY REQUIRE MODIFICATIONS DUE TO ADVERSE SOIL CONDITIONS, TRAFFIC CONDITIONS, OR OTHER UNFORESEEN RELEVANT SITE CONDITIONS.

2. ALL MATERIALS AND WORKMANSHIP SHALL MEET THE REQUIREMENTS OF THE AMERICAN PUBLIC WORKS ASSOCIATION STANDARD SPECIFICATIONS.

3. DEFLECTION/COMPACTION TESTS WILL BE REQUIRED AS DEEMED NECESSARY BY THE CITY. NO DEFLECTION IS ALLOWED.

4. SUBGRADE MUST BE APPROVED BY THE CITY PRIOR TO PAVING.

Updated 1/25 see IC#4 add to Part II - Streets (Construction Details) new drawing No. II-29

CITY OF TROUTDALE

TOWN CENTER OVERLAY DISTRICT STREET (CROSS SECTION)

DATE: UPDATED 1999

DRAWING NO. II - 29

FILENAME: APWA0101.DWG

# WATER

## (Part III )

## * General Requirements

# WATER DISTRIBUTION SYSTEM

**(General Requirements)**

1. **Proposed water mains must be in accordance with the City of Troutdale's Public Facilities Plan. Main sizes must deliver adequate fire flows (of no less than 1000 gpm for single dwelling residential areas, and no less than 1500 gpm for commercial and industrial developments) plus normal system demand while maintaining a minimum residual pressure of 20 psi, as required by law. During normal demand periods, a minimum pressure of 45 psi is required. If this pressure is not available in the zone in which the new pipe is being placed, means to increase pressure, to no less than 45 psi, will be required. Associated expenses will be incurred by the developer.**

2. **All proposed water main additions to the City's existing water system shall be added to our current automated water model, and simulations performed of future on-site water demands for fire, peak hours, and normal domestic, industrial and commercial usage. Other demand situations may be required and run by the City. All simulations shall be done and approved by the City prior to "final" approval of construction plans. All costs associated with these water model analysis will be forwarded to the developer for reimbursement.**

3. **All construction/installation of water mains shall be done in a safe, neat and workmanlike manner, and under supervision by City forces at all times. All safety requirements from OSHA and other State regulating agencies must be met.**

4. **Water mains shall be looped wherever feasible. Water mains must be looped within cul-de-sacs if the street exceeds 350 feet in length and serves more than 12 lots.**

5. **Water main pipe material shall be Class 52 ductile iron only.**

6. **Air relief valves, pressure relief valves, pressure reducing valves, backflow prevention valves, etc., shall be used where necessary.**

7. **Hydrants shall be spaced such that all residential structures can be reached with 400 feet of hose. Hydrants shall be within 150 feet of commercial and industrial structures. This distance requirement may vary as directed by the fire marshal. Therefore, these distances are subject to change before these standards are updated.**

8. **Hydrants should be located at street intersections and at cul-de-sac entrances rather than at mid-block when possible. The typical location for fire hydrants is at the end of the curb returns and/or in direct alignment to a common property line to two lots. Do not place fire hydrants in the middle of a lot frontage. Connect fire hydrants to the largest main or to the main which provides a looped flow. Connection of a fire hydrant**

to a main less than 6-inches is prohibited, and if two or more fire hydrants are required, an 8" minimum diameter pipe shall be used.

9. A minimum of a 6-inch diameter main shall be installed if the line will be extended in the future.

Amended see IC#12 - P1

10. Fire hydrant styles shall be Mueller 200, Kennedy Guardian K-81, Clow Medallion, or Waterous Pacer 6790 with two hose connections and one pumper nozzle. All fire hydrants to become public shall be painted safety yellow and all private hydrants painted safety red.

Amended see IC#38

11. Blow-off assemblies are required at all dead-end lines. Locate blow-off assemblies four feet from face of curb, within the street (see Drawing No. IV-17 for further detail).

12. An 18-inch minimum horizontal separation is required between service taps on a water main line.

13. When water service is extended to a property, it must be done by means of a properly-sized water main (minimum diameter 4" if serving fewer than 12 lots and no fire hydrants; minimum diameter 6" otherwise brought at least to the property line of the affected parcel. Service lines will not be used to extend water service within public right-of-way or across a third party's property

14. Lots may be served by a single or a double service line. The single service lines shall be 3/4 inch minimum diameter, and the double service lines shall be a 1-inch minimum diameter, type "K" copper pipe material. Only two 3/4-inch diameter water service lines are allowed to be branched off from a 1-inch diameter service line tap. Water services, meters and meter boxes must be placed far enough away from fire hydrants and/or light poles to avoid conflict with curb weepholes. All "public" parcels designated as open, and to be used as greenways, must be served with a water service large enough to adequately irrigate the site. Location and size of service for irrigation or otherwise will be determined by the City.

Superseded see IC# 2

15. Each half of a duplex shall be served with individual service lines and individual meters.

16. Four-inch water lines shall service no more than twelve lots, and no fire hydrants. The City reserves the right to require that a larger size diameter pipe be used - determined by the type of project at hand.

17. Class 52 ductile iron may be tapped direct (with no saddle but with corporation stop) for 3/4 inch and 1-inch size services. Saddles shall be used on all taps greater than 1 inch in diameter.

18. **All elbows/bends on water mains shall have thrust blocks as shown on the enclosed Standard Drawings.**

19. **A water sampling station(s) may be required at all new subdivisions, and as part of new commercial and industrial developments when additions to the water distribution system are included. See drawing IV-7. The exact location for the sampling station(s) will be determined by the City on a per-project basis.**

20. **A depth of 36-inches from finished grade to the top of the water main is required. Placing water lines deeper or shallower than 36" inches is prohibited. As such, it may be necessary to have an Oregon State licensed surveyor field stake the ultimate elevation of the water main if the water main is placed before curbs and gutters are in place.**

21. **All new pipes must be properly flushed, pressure tested, and chlorinated by the contractor, and inspected by City forces. Bacteriological samples will be taken by the City when requested by the general contractor. The operation of nearby water valves (opening and closing) by the contractor during flushing is strictly prohibited. This will only be done by City forces, when so requested by the contractor. This is required for private and public lines larger than 1-inch. The discharge of over chlorinated water with a total chlorine residual greater than 3 mg/L regardless of volume, shall not be discharged to surface waters or storm sewers.**

22. **All backflow prevention devices (double check backflow preventors, reduced pressure backflow preventors, pressure and atmospheric vacuum breakers, etc.) must be approved by the Oregon State Health Division. All service lines greater than 1-inch shall have a double check backflow preventor as minimum protection. All 3/4-inch and 1-inch water services shall have a minimum of a single check valve installed by the City if a backflow prevention device is not required of the property owner and/or developer. All irrigation systems shall have a double check backflow preventor device.**

23. **The builder/developer must provide the City any guarantee or warranty normally furnished with the purchase of equipment or materials used in connection with the project at hand. In addition, they must furnish a written warranty providing satisfactory in-service operation of work performed by affected contractor (including, but not limited to mechanical, electrical, on-site permanent concrete structures, water main, valves, fire hydrants, etc.) for a period of two (2) years following date of project acceptance.**

Deleted meter types - see IC#14

24. **The following is a list of acceptable/existing materials and/or equipment currently in use by the City's water distribution system:**



**Water meters:**

Meter sizes/ types Superceded - see IC #25

- 3/4" and 1" size: Sensus SRI with gallon register
- 1 1/2" and 2" size: Sensus SRI or Neptune with gallon register
- Fire hydrant meter: Neptune's Trident
- Compound Meter: Sensus only
- Turbine Meter: Sensus and Neptune's Trident

Superseded by IC #14

*Note: All meters that are installed inside a vault considered to be a confined space must have a remote readout configuration.

**Water Valves:**

- 4", 6" and 8" diameter: gate valves must meet or exceed AWWA C-500 standards
- 10" and 12" diameter: butterfly valves must meet or exceed AWWA C-504 standards

**Water Pipe:**

- Large diameter (4" and greater): ductile iron, class 52
- Fittings: Ductile Iron Class 350
- 1 1/2" and 2" diameter: Type K, soft or rigid copper
- 3/4" and 1": Type K, soft copper
- 3/4" and 1" brass fittings: McDonald MAC-PAK, Mueller C110 and Ford PAC joint (includes ball and key style fittings)
- Use Mueller C110 fittings for 2" and larger diameter fittings

**Meter Boxes:**

Superceded see IC# 7 Paragraph A

Superceded by IC #27 Paragraph A.

*See IC 32 for additional specifications

- With 3/4" and 1" meters: Brooks 36-H or meter box equipment company #66H with reader lid for landscaped areas; and Brooks 36T or meter box equipment company #66H or equal, when placed in concreted areas.
- With 1 1/2" meters without by-pass plumbing: Brooks 38-H or meter box equipment co. #68
- With 2" meters without by-pass plumbing: Brooks 65-H or meter box equipment co. #69

**Automatic Valves:**

- Clayton

**Pilot Control Valves:**

- **Clayton 20-200 PSI**

**Valve Boxes:**

- **Model #910**

**Backflow Devices:**

- **All must be Oregon State Health approved.**

**Fire Service Vaults with Fire Department Connections:**

- **4"- use 676-WA**
- **6" - use 687-WA**
- **8" - use 5106-LA**
- **10" - use 5106-LA**

**Fire Service Vaults without Fire Department Connections:**

- **3" - use 466 or 660**
- **4" - use 577-WA**
- **6" - use 676-WA**
- **8" - use 687-WA**
  **10" - use 5106-LA**

**Gauges:**

- **0-200 PSI, 3 1/2" face**

**Meter Vaults:**

**2" - with bypass plumbing vault. Shall meet minimum clearances as shown in Construction Detail IV-12. Reference to construction Detail IV-12 is made to observe minimum clearances in vault only.**

- **3" - use 676-WA**
- **4" - use 687-WA**
- **6" - use 687-WA**
- **8" - use 810-LA**

*** Note: All vaults with remote readouts must have a Brooks 37 lid in addition to the normal doors.**

**Vault Doors:**

**- Shall be galvanized diamond plate and spring assisted model #332P. H-20 rating for traffic areas, and H-10 for landscaped areas.**

**Note: The above equipment and materials are listed for information only. An "equal" substitute of materials and/or equipment can be proposed to the City for consideration and approval.**

**25. All new connections to existing water mains require issuance of a public works permit and inspection by the City prior to backfilling. A permit fee of $50.00 will be assessed for each connection/inspection.**

**26. All other construction practices (relating to water) within the City's public right-of-way, not covered in these "general requirements" and/or in the "construction details" sections, shall comply with the rules and regulations in the most recent editions of the American Public Works Association Standard Specifications for Public Works Construction, the Standards of the American Water Works Association and the Oregon State Health Division rules.**

Deleted - Replaced by IC #22.

**27. As required by OAR 333-61-060, all construction plans of public improvements involving the construction of new water distribution lines must be sent to the OSHD for their review and approval. This will be done by the City upon submittal of accepted drawings and the required fee by the developer. OSHD approval must be sent to the City before an authorization to begin construction can be granted.**

**28. Public water lines within streets will only be installed in public rights-of-way. Any waterline installed within private streets will be privately owned and maintained. Public responsibility for the water distribution system stops at the water meter.**

**29. All new improvements proposed for construction and intended for public dedication (once these facilities are constructed to City standards) must be proposed to the City in writing, by the developer and/or legal owner of the project, prior to the receipt of an authorization to begin construction from the City. This formal written request from the developer/owner to the City must be reviewed and approved by the City, and then signed by both parties to formally bind both parties to the agreement.**

# WATER

## (PART IV)

## * Construction Details

| (HORIZONTAL) BEARING AREA OF THRUST BLOCKS IN SQUARE FEET | | | | | | | | | (VERTICAL) VOLUME OF THRUST BLOCK IN CUBIC YARDS | | | |
|---|---|---|---|---|---|---|---|---|---|---|---|---|
| FITTING SIZE | TEE, WYE, DEAD END AND HYDRANT | STRADDLE BLOCK | 90° BEND PLUGGED CROSS | TEE PLUGGED ON RUN | | 45° BEND | 22-1/2° BEND | 11-1/4° BEND | 90° BEND | 45° BEND | 22-1/2° BEND | 11-1/4° BEND |
| | | | | A-1 | A-2 | | | | | | | |
| 4 | 1.0 | 1.6 | 1.4 | 1.9 | 1.4 | 1.0 | --- | --- | --- | --- | --- | --- |
| 6 | 2.1 | 3.7 | 3.0 | 4.3 | 3.0 | 1.6 | 1.0 | --- | 1.3 | --- | --- | --- |
| 8 | 3.8 | 6.5 | 5.3 | 7.6 | 5.4 | 2.9 | 1.5 | 1.0 | 2.3 | 1.1 | --- | --- |
| 10 | 5.9 | 10.2 | 8.4 | 11.8 | 8.4 | 4.6 | 2.4 | 1.2 | 3.7 | 1.8 | --- | --- |
| 12 | 8.5 | 14.7 | 12.0 | 17.0 | 12.0 | 6.6 | 3.4 | 1.7 | 5.5 | 2.8 | 1.2 | --- |
| 14 | 11.5 | --- | 16.3 | 23.0 | 16.3 | 8.9 | 4.6 | 2.3 | 7.6 | 3.9 | 1.7 | --- |
| 16 | 15.0 | 26.1 | 21.3 | 30.0 | 21.3 | 11.6 | 6.0 | 3.0 | 9.9 | 5.1 | 2.3 | 0.9 |
| 18 | 19.0 | --- | 27.0 | 38.0 | 27.0 | 14.6 | 7.6 | 3.8 | --- | --- | --- | --- |
| 20 | 23.5 | 40.8 | 33.3 | 47.0 | 33.3 | 18.1 | 9.4 | 4.7 | --- | --- | --- | --- |
| 24 | 34.0 | 58.8 | 48.0 | 68.0 | 48.0 | 26.2 | 13.6 | 6.8 | --- | --- | --- | --- |

NOTES:

1. ABOVE BEARING AREAS BASED ON TEST PRESSURE OF 150 PSI AND AN ALLOWABLE SOIL BEARING STRESS OF 2000 POUNDS PER SQUARE FOOT. TO COMPUTE BEARING AREAS FOR DIFFERENT TEST PRESSURES AND SOIL BEARING STRESSES, USE THE FOLLOWING EQUATION:

   BEARING AREA = ( TEST PRESSURE / 150 ) x ( 2000 / SOIL BEARING STRESS ) x ( TABLE VALUE )

2. ABOVE VOLUMES BASED ON TEST PRESSURE OF 150 PSI AND THE WEIGHT OF CONCRETE = 4050 POUNDS PER CUBIC YARD. TO COMPUTE FOR DIFFERENT TEST PRESSURES, USE THE FOLLOWING EQUATION:

   VOLUME = ( TEST PRESSURE / 150 ) x ( TABLE VALUE )

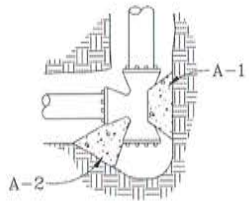


TEE

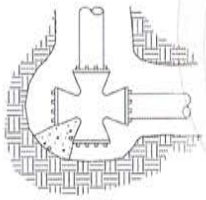

CROSS

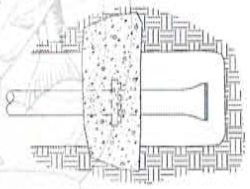

STRADDLE BLOCK

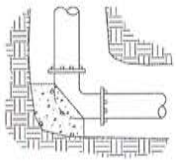

BEND

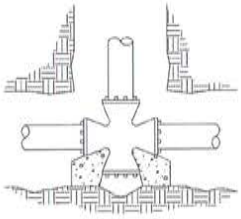

CROSS

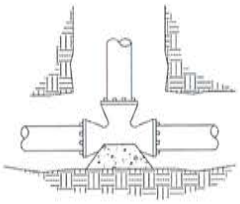

TEE

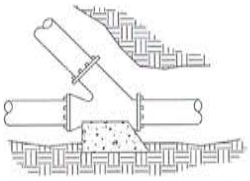

WYE

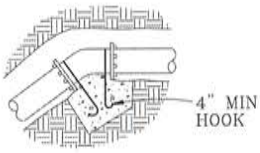


VERTICAL BEND

| RODS FOR VERTICAL BENDS | | |
|---|---|---|
| FITTING SIZE | ROD SIZE | EMBEDMENT |
| 12" AND LESS | #6 | 30" |
| 14"-16" | #8 | 36" |

GENERAL:

1. CONCRETE BLOCKING TO BE POURED AGAINST UNDISTURBED EARTH.
2. ALL CONCRETE TO BE 2400 PSI @ 28 DAYS, MINIMUM.
3. INSTALL ISOLATION MATERIAL BETWEEN PIPE AND/OR FITTINGS BEFORE POURING CONCRETE BLOCKING.
4. CONCRETE SHALL BE KEPT CLEAR OF ALL JOINTS AND ACCESSORIES. DO NOT POUR CONCRETE DIRECTLY ON PIPE.
5. TIE RODS SHALL BE DEFORMED GALVANIZED COLD ROLLED STEEL, 40000 PSI TENSILE STRENGTH.
6. ALL THRUST BLOCKS MUST BE INSPECTED BY CITY FORCES BEFORE COVERING.

CITY OF TROUTDALE

*THRUST BLOCKS*

DATE: UPDATED 1997

DRAWING NO. IV - 1

FILENAME: APWA0036.DWG

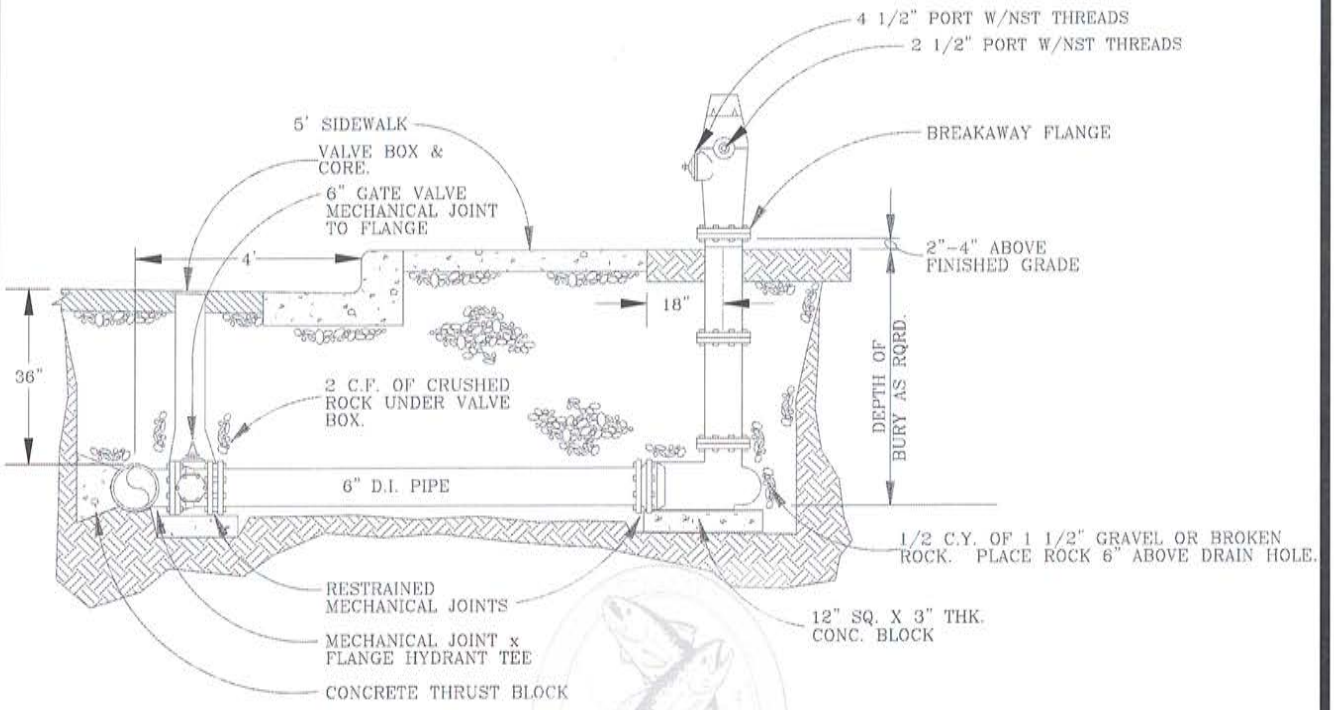


# BEHIND SIDEWALK INSTALLATION

GENERAL NOTES

1. WHEN PIPE IS SHORTER THAN 18', NO JOINTS ARE ALLOWED. USE MECHANICAL JOINT RETAINER GLANDS. TWO 3/4" GALVANIZED TIE RODS MAY BE USED IN LIEU OF THRUST BLOCKS FOR INSTALLATIONS LESS THAN 18' LONG. TIE RODS SHALL BE COATED WITH TWO COATS OF BITUMASTIC.
2. WHEN PIPE IS LONGER THAN 18', RESTRAINED MECHANICAL JOINTS ARE NOT REQUIRED.
3. CONCRETE THRUST BLOCKS SHALL BE CONSTRUCTED AS PER THRUST BLOCK STANDARD DRAWING # IV - 1
4. FIRE HYDRANT PUMPER PORT SHALL FACE DIRECTION OF ACCESS TO THE HYDRANT.
5. FIRE HYDRANTS SHALL BE PLACED TO PROVIDE A MINIMUM OF 5' CLEARANCE FROM DRIVEWAYS, LIGHT POLES, METER SERVICES & BOXES AND OTHER STRUCTURES.
6. PUBLIC HYDRANTS SHALL BE PAINTED SAFETY YELLOW; PRIVATE HYDRANTS SAFETY RED.
7. HYDRANTS ALLOWED:
   A) MUELLER 200
   B) WATEROUS PACER 6790
   C) KENNEDY K-81 GUARDIAN
   D) CLOW MEDALLION
   E) OR APPROVED EQUAL

   Superseded see IC#12 P2 11/2/04

   ALL HYDRANTS MUST HAVE 1-1/2" OPERATING NUT & NATIONAL STANDARD FIRE HOSE THREAD.
8. ENSURE THAT THE FIRE HYDRANT IS INSTALLED HORIZONTALLY & VERTICALLY LEVELED.

Superseded see IC#20 P1 5/17/12

CITY OF TROUTDALE

FIRE HYDRANT ASSEMBLY (BEHIND SIDEWALK)

| DATE: | DRAWING NO. |
|---|---|
| UPDATED 1997 | IV - 2 |

FILENAME: APWA0112.DWG

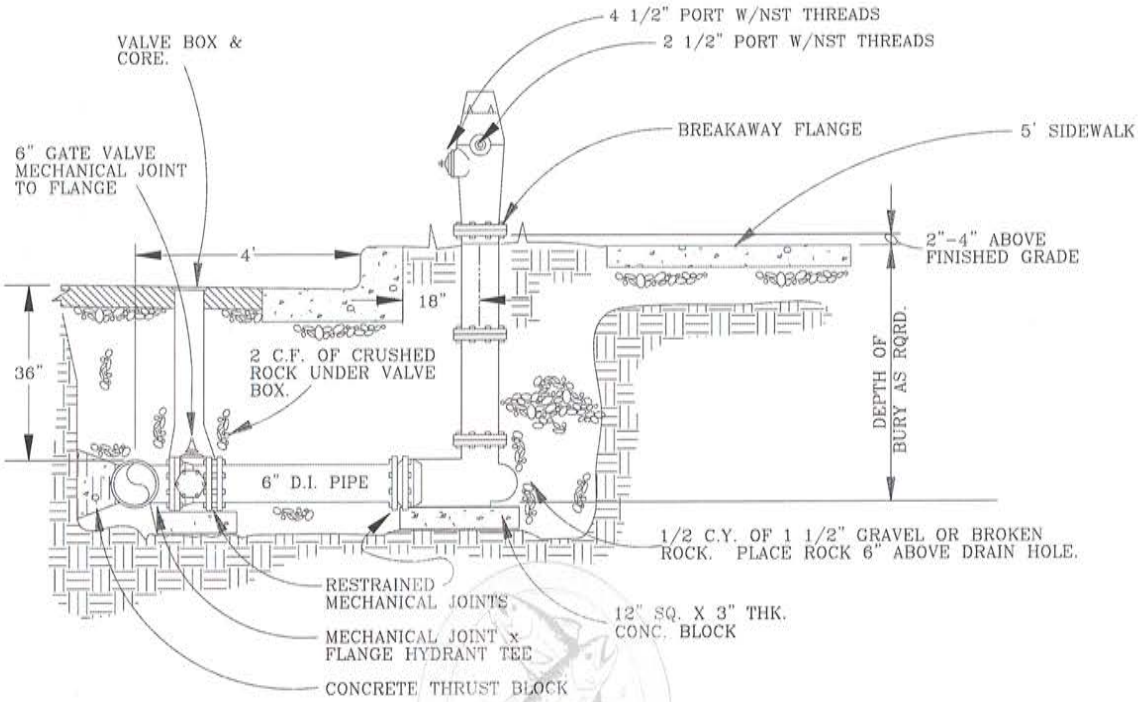


# *BEHIND CURB INSTALLATION*

GENERAL NOTES

1. WHEN PIPE IS SHORTER THAN 18', NO JOINTS ARE ALLOWED. USE MECHANICAL JOINT RETAINER GLANDS. TWO 3/4" GALVANIZED TIE RODS MAY BE USED IN LIEU OF THRUST BLOCKS FOR INSTALLATIONS LESS THAN 18' LONG. TIE RODS SHALL BE COATED WITH TWO COATS OF BITUMASTIC.
2. WHEN PIPE IS LONGER THAN 18', RESTRAINED MECHANICAL JOINTS ARE NOT REQUIRED.
3. CONCRETE THRUST BLOCKS SHALL BE CONSTRUCTED AS PER THRUST BLOCK STANDARD DRAWING # IV - 1
4. FIRE HYDRANT PUMPER PORT SHALL FACE DIRECTION OF ACCESS TO FIRE HYDRANT.
5. FIRE HYDRANTS SHALL BE PLACED TO PROVIDE A MINIMUM OF 5' CLEARANCE FROM DRIVEWAYS, LIGHT POLES, METER SERVICES & BOXES AND OTHER STRUCTURES.
6. PUBLIC HYDRANTS SHALL BE PAINTED SAFETY YELLOW; PRIVATE HYDRANTS SAFETY RED.
7. HYDRANTS ALLOWED:
   A) MUELLER 200
   B) WATEROUS PACER 6790
   C) KENNEDY K-81 GUARDIAN
   D) CLOW MEDALLION
   E) OR APPROVED EQUAL

   ALL HYDRANTS MUST HAVE 1-1/2" OPERATING NUT & NATIONAL STANDARD FIRE HOSE THREAD.
8. ENSURE THAT FIRE HYDRANT IS INSTALLED HORIZONTALLY & VERTICALLY LEVELED.

Superseded see IC#12 P3 11/2/04

Superseded see IC#20 P2 5/17/12

CITY OF TROUTDALE

*FIRE HYDRANT ASSEMBLY*

*(BEHIND CURB)*

| DATE: | DRAWING NO. |
|---|---|
| UPDATED 1997 | IV - 3 |

FILENAME: APWA0119.DWG

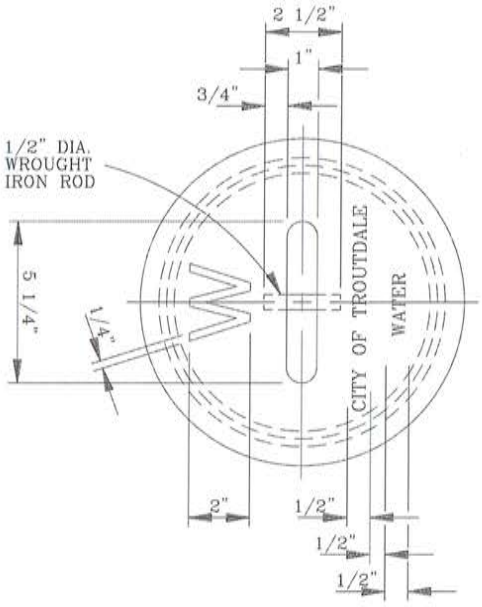


COVER PLAN

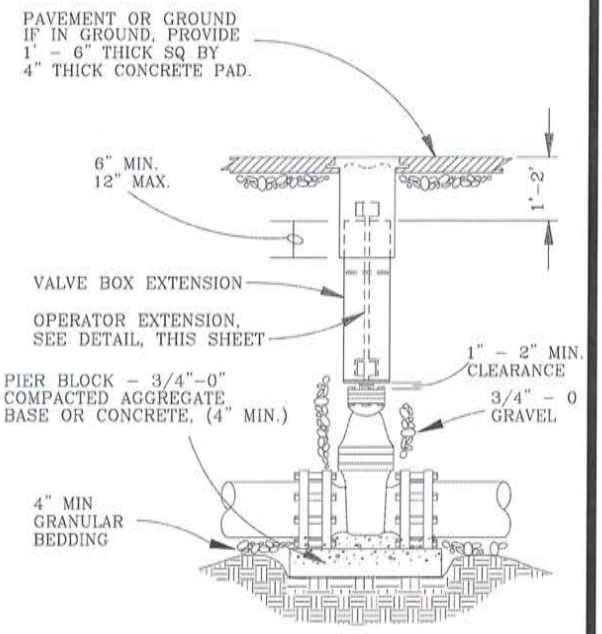


VALVE BOX
ASSEMBLY DETAIL

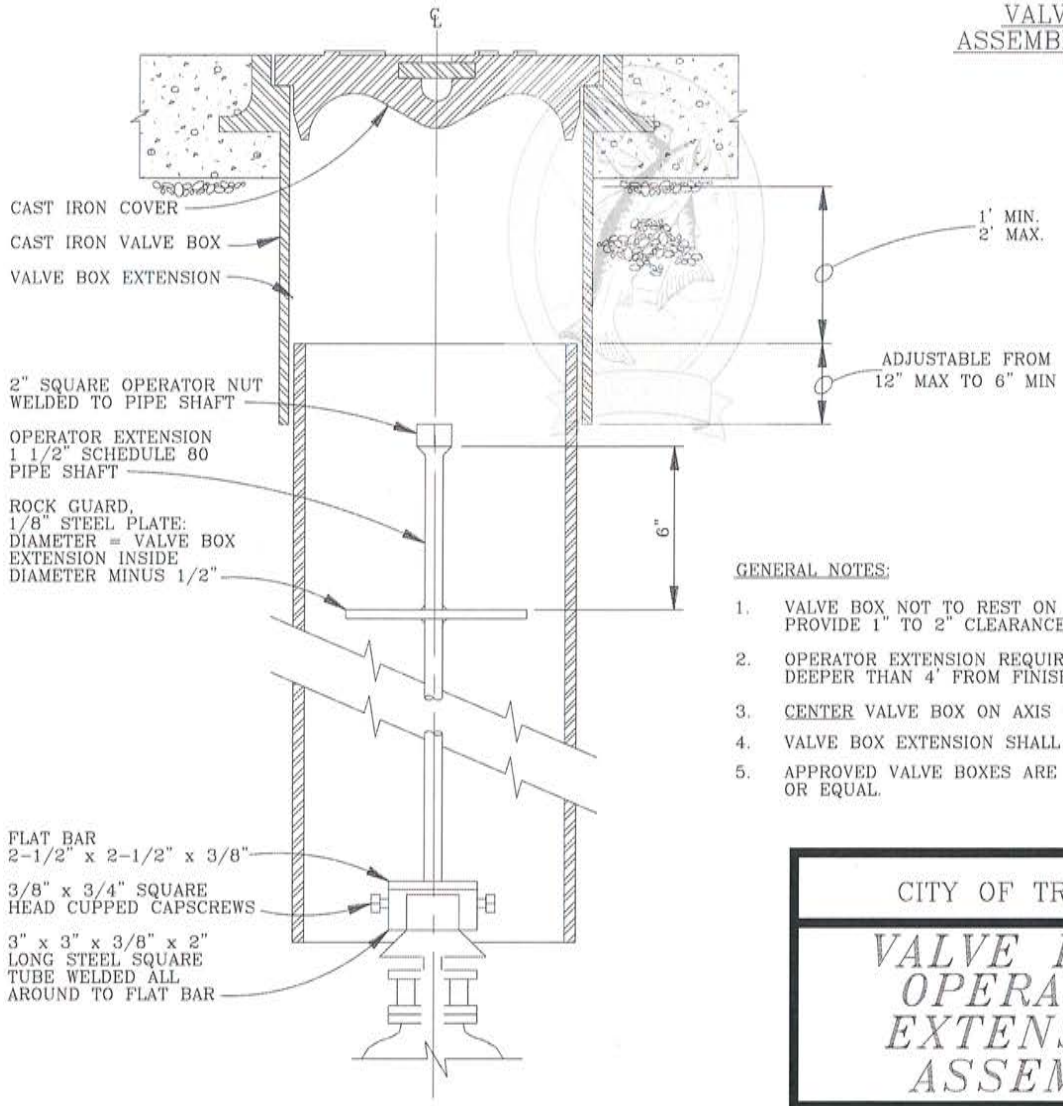


VALVE BOX EXTENSION SECTION

GENERAL NOTES:

1. VALVE BOX NOT TO REST ON OPERATING ASSEMBLY. PROVIDE 1" TO 2" CLEARANCE.
2. OPERATOR EXTENSION REQUIRED WHEN VALVE NUT IS DEEPER THAN 4' FROM FINISH GRADE.
3. CENTER VALVE BOX ON AXIS OF OPERATOR NUT.
4. VALVE BOX EXTENSION SHALL BE CAST IRON.
5. APPROVED VALVE BOXES ARE STYLES 910, OR EQUAL.

CITY OF TROUTDALE

# VALVE BOX & OPERATOR EXTENSION ASSEMBLY

| DATE: | DRAWING NO. |
|---|---|
| UPDATED 1997 | IV - 4 |

FILENAME: APWA0038.DWG

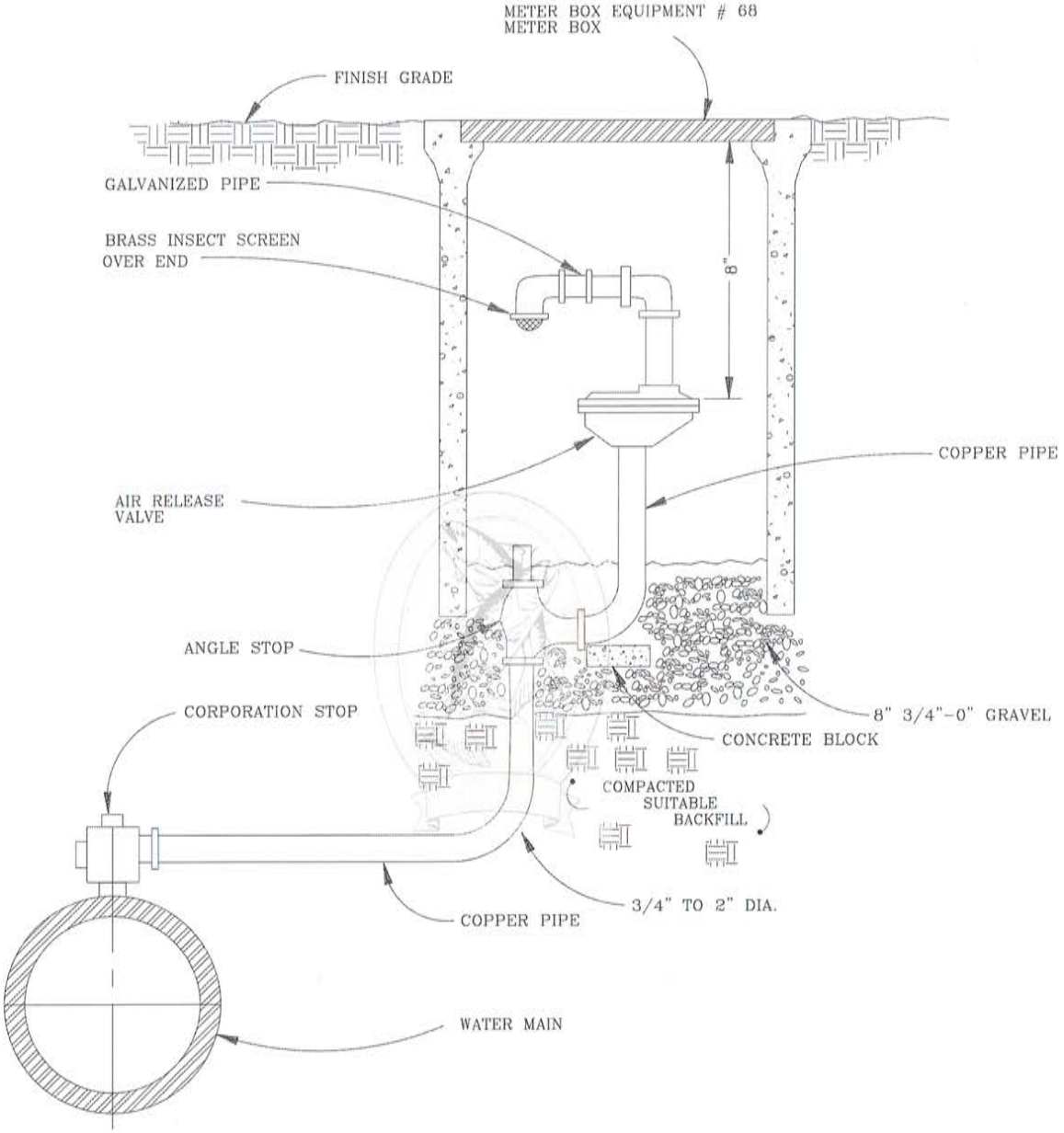


GENERAL NOTES:

1. AIR-RELEASE AND VALVE ASSEMBLIES SHALL BE INSTALLED AT WATERMAIN HIGH POINTS. THE BREATHER TUBE SHALL EXTEND ABOVE GROUND FACING DOWNWARD. ELBOW MUST BE SCREENED AS SHOWN.

2. PIPE AND VALVE SIZES SHALL BE SPECIFIED FOR EACH PROJECT BY THE DEVELOPER'S ENGINEER AND/OR THE CITY.

CITY OF TROUTDALE

# AIR RELEASE VALVE ASSEMBLY

| DATE: | DRAWING NO. |
|---|---|
| UPDATED 1997 | IV - 5 |

FILENAME: APWA0138.DWG

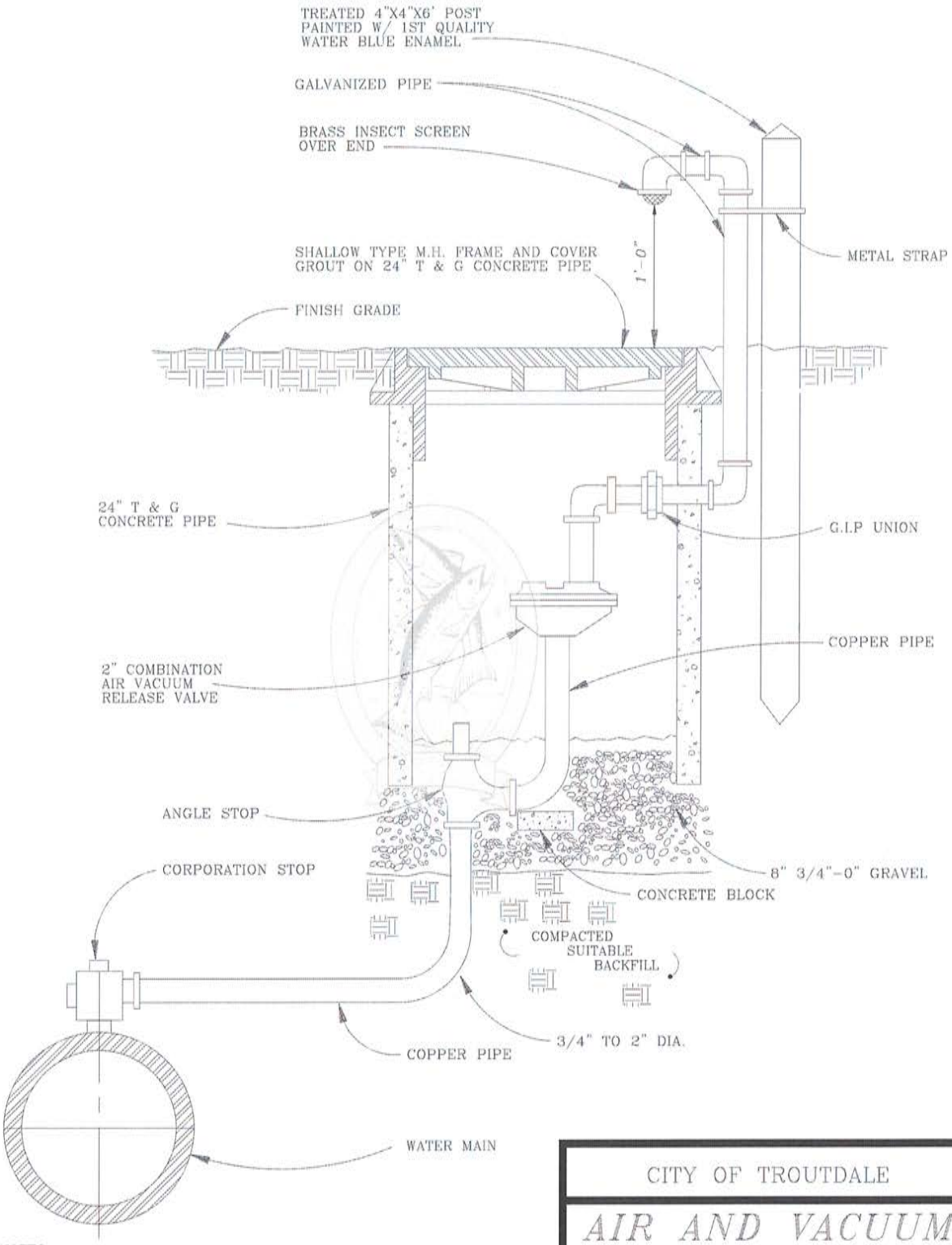


GENERAL NOTES:

1. AIR AND VACUUM RELEASE VALVE ASSEMBLIES SHALL BE INSTALLED AT WATERMAIN HIGH POINTS. THE BREATHER TUBE SHALL EXTEND ABOVE GROUND FACING DOWNWARD. ELBOW MUST BE SCREENED AS SHOWN.

2. PIPE AND VALVE SIZES SHALL BE SPECIFIED FOR EACH PROJECT BY THE DEVELOPER'S ENGINEER AND/OR THE CITY.

CITY OF TROUTDALE

# AIR AND VACUUM RELEASE VALVE ASSEMBLY

| DATE: | DRAWING NO. |
|---|---|
| UPDATED 1997 | IV – 6 |

FILENAME: APWA0042.DWG

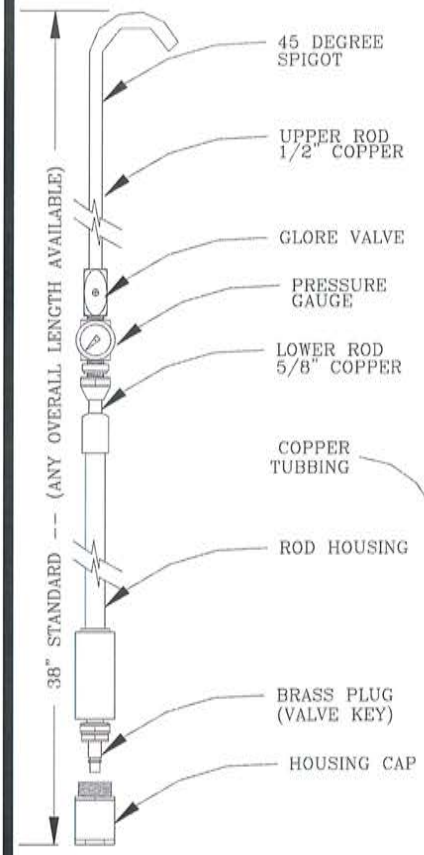


PROBE ROD

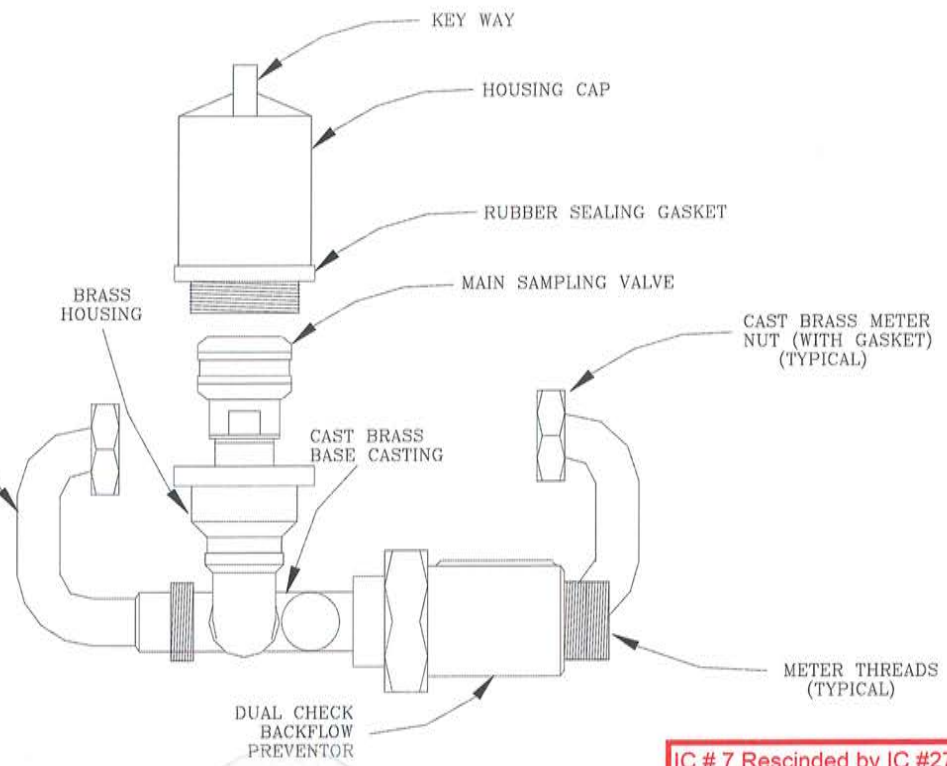


SAMPLING STATION

IC # 7 Rescinded by IC #27

~~Updated 10/28/02 see IC# 7 Paragraph B~~

Mid-States Plastics meter box BCF 1118-12-RL for 3/4" meter or Mid-States Plastics meter box BCF 1324-12-RL for 1" meter

Superceded by IC #27 Paragraph B - reads; "Armorcast Rotocast Polyethyline Meter Box, or approved equal."

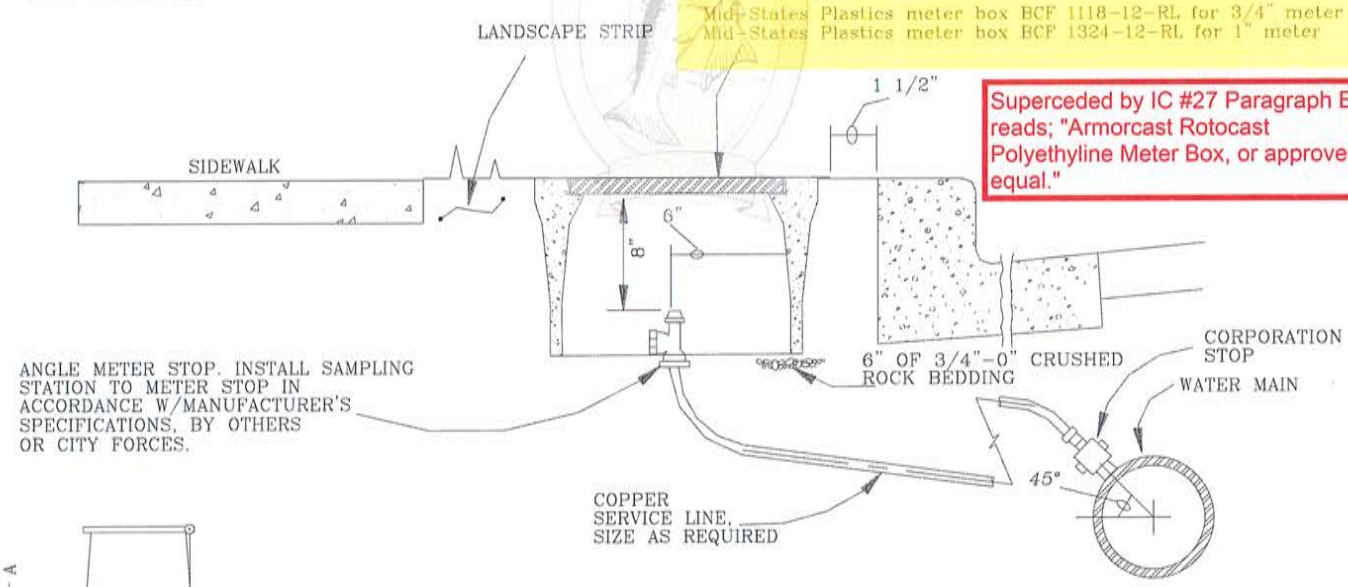


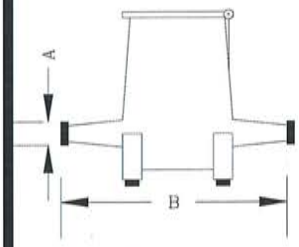


| METER DIMENSIONS | | | |
|---|---|---|---|
| METER SIZE | 5/8" | 5/8" X 3/4" | 3/4" |
| (A) THREADS | 3/4" | 1" | 1" |
| (B) LAYING LENGTH | 7 1/2" | 7 1/2" | 9" |

GENERAL NOTES:

1. USE SAMPLING STATION MODEL # 1500L OR EQUAL.
2. USE PROBE ROD, MODEL # 150G.
3. USE THIS SAMPLE STATION CONFIGURATION UNLESS OTHERWISE DIRECTED BY THE CITY.
4. GIVE THE PROBE ROD TO THE CITY CREWS (PUBLIC WORKS INSPECTOR).

CITY OF TROUTDALE

# WATER SAMPLING STATION

DATE: UPDATED 2003

DRAWING NO. IV - 7

FILENAME: APWA0124.DWG

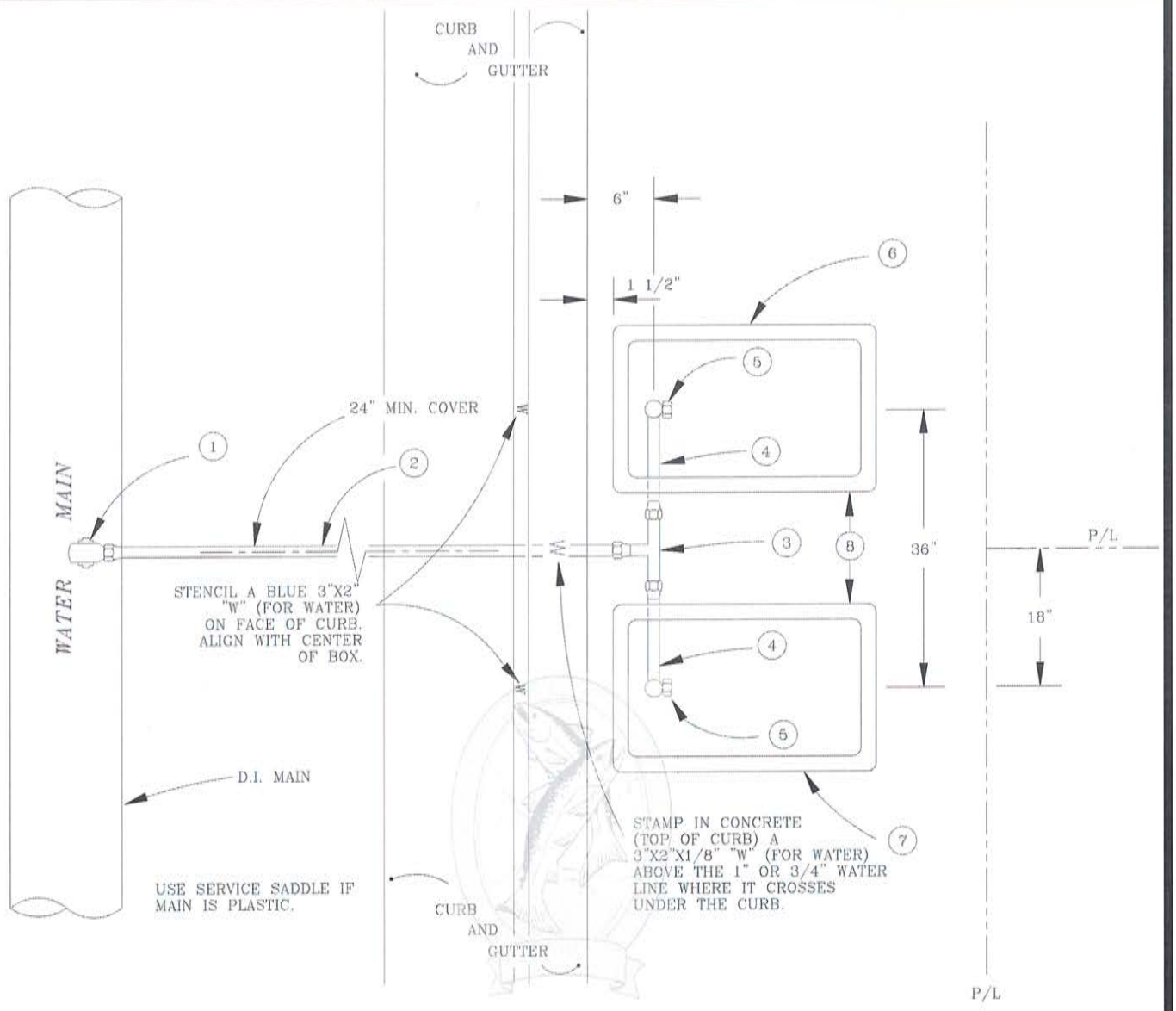


NOTES:

(1) CORPORATION STOP SET AT 45° ANGLE, AS SHOWN ON DRAWING # IV – 9.

(2) 1" SOFT TEMPER TYPE 'K' COPPER TUBING COMPLYING W/ASTM B-88.

(3) 3/4" X 3/4" X 1" "BULLHEAD" TEE ALL COPPER FLARE.

(4) 3/4" SOFT TEMPER TYPE 'K' COPPER TUBING COMPLYING W/ASTM B-88.

(5) 3/4" ANGLE METER STOP.

Updated 10/28/02
see IC# 7
Paragraph C

(6) MID-STATES PLASTICS METER BOX BCF 1118-12-RL.

(7) MID-STATES PLASTICS METER BOX BCF 1118-12-RL.

note 6 & 7 Superceded
by IC #27
see IC for wording

(8) TWO 3/4" SERVICES MAY BE PROVIDED WHEN THE 1" SERVICE WOULD BE IN CONFLICT WITH A STREET LIGHT POLE. THE DISTANCE BETWEEN METER BOX EDGES MUST BE 4'.

GENERAL:

1. "EQUAL" SUBSTITUTES FOR ANY MATERIALS SHOWN SHALL BE APPROVED BY THE CITY.

2. ALL PIPE AND STRUCTURE ZONES SHALL BE BACKFILLED USING GRANULAR SOILS COMPACTED TO 95%, MAXIMUM RELATIVE DENSITY.

3. SET TOP OF ANGLE METER STOP 8" BELOW TOP OF CURB, AS SHOWN ON DRAWING # IV – 9.

4. TOP OF METER BOX FLUSHED WITH TOP OF CURB, MUST BE AS SHOWN ON DRAWING # IV – 9.

5. METER BOX SHALL BE CENTERD OVER THE COMPLETED METER ASSEMBLY.

6. ACCEPTABLE BRASS FITTINGS: MUELLER C 110, FORD PAC JOINT OR MCDONALD MAC PAC, OR EQUAL.

7. A "W" (FOR WATER) PAINTED ON THE FACE OF THE CURB AND STAMPED IN CONCRETE MUST BE PROVIDED AS SHOWN.

8. ONLY 2, 3/4-INCH DIAMETER WATER SERVICES ARE ALLOWED TO BRANCH OFF FROM A 1-INCH DIAMETER WATER SERVICE LINE.

CITY OF TROUTDALE

# 1" DOUBLE WATER SERVICE

| DATE: | DRAWING NO. |
|---|---|
| UPDATED 2003 | IV – 8 |

FILENAME: APWA0120.DWG

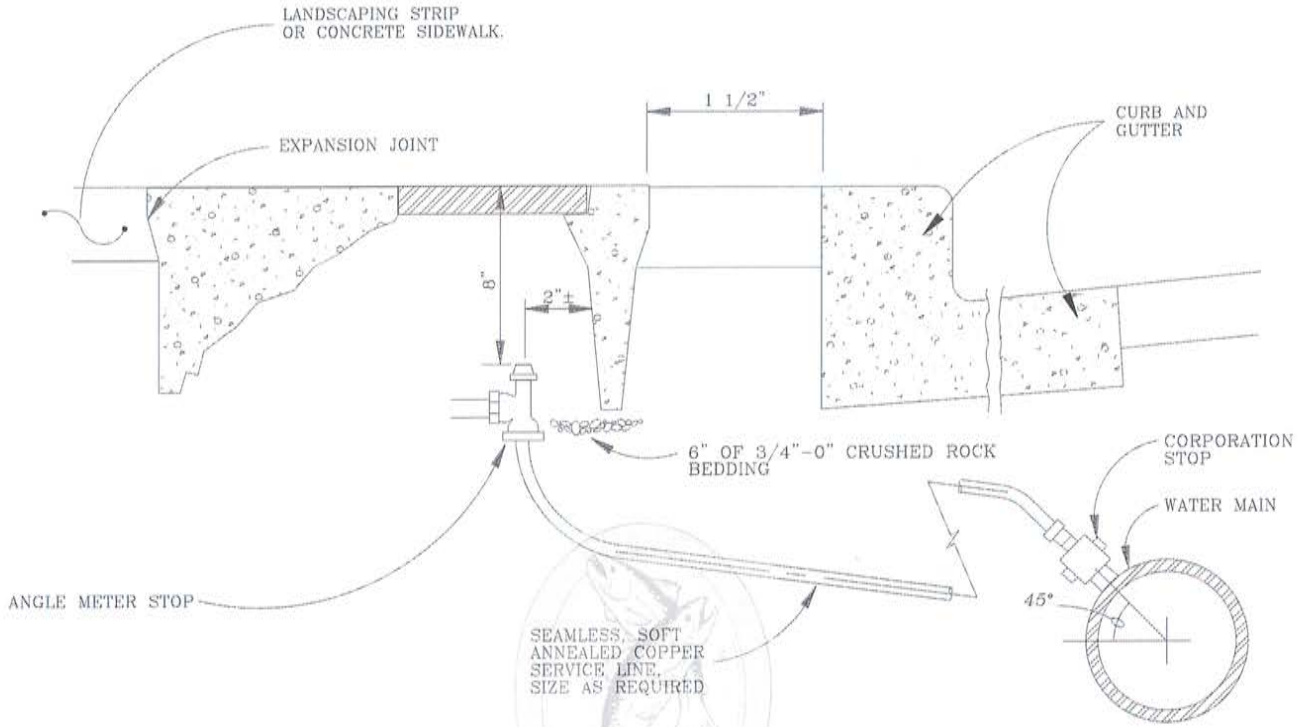


GENERAL NOTES:

1. REFER TO DRAWING # IV – 8, FOR DETAILS ON INSTALLATION OF A 1" DOUBLE WATER SERVICE, AND FOR ADDITIONAL HORIZONTAL LOCATION INFORMATION.
2. ANGLE METER STOP SHALL BE SET TO A TOLERANCE OF +/- 1".
3. STAMP (IN CONCRETE – ON TOP OF CURB) AND STENCIL A BLUE "W" ON FACE OF CURB WHERE SERVICE LINE CROSSES THE CURB, AS SHOWN ON DRAWING # IV – 8.
4. CORPORATION STOPS MUST BE AT LEAST 18" APART.
5. METER BOX SHALL BE INSTALLED FLUSHED WITH TOP OF CURB.
6. 3/4" & 1" BRASS FITTINGS SHALL BE EITHER MUELLER C110, FORD PAC JOINT, MCDONALD MAC PAK, OR APPROVED EQUAL.
7. THIS DETAIL APPLIES TO METER INSTRUCTIONS WITHOUT BYPASS PLUMBING CONFIGURATION.

CITY OF TROUTDALE

# 3/4" TO 2" SINGLE WATER SERVICE

| DATE: | DRAWING NO. |
|---|---|
| UPDATED 1997 | IV – 9 |

FILENAME: APWA0043.DWG

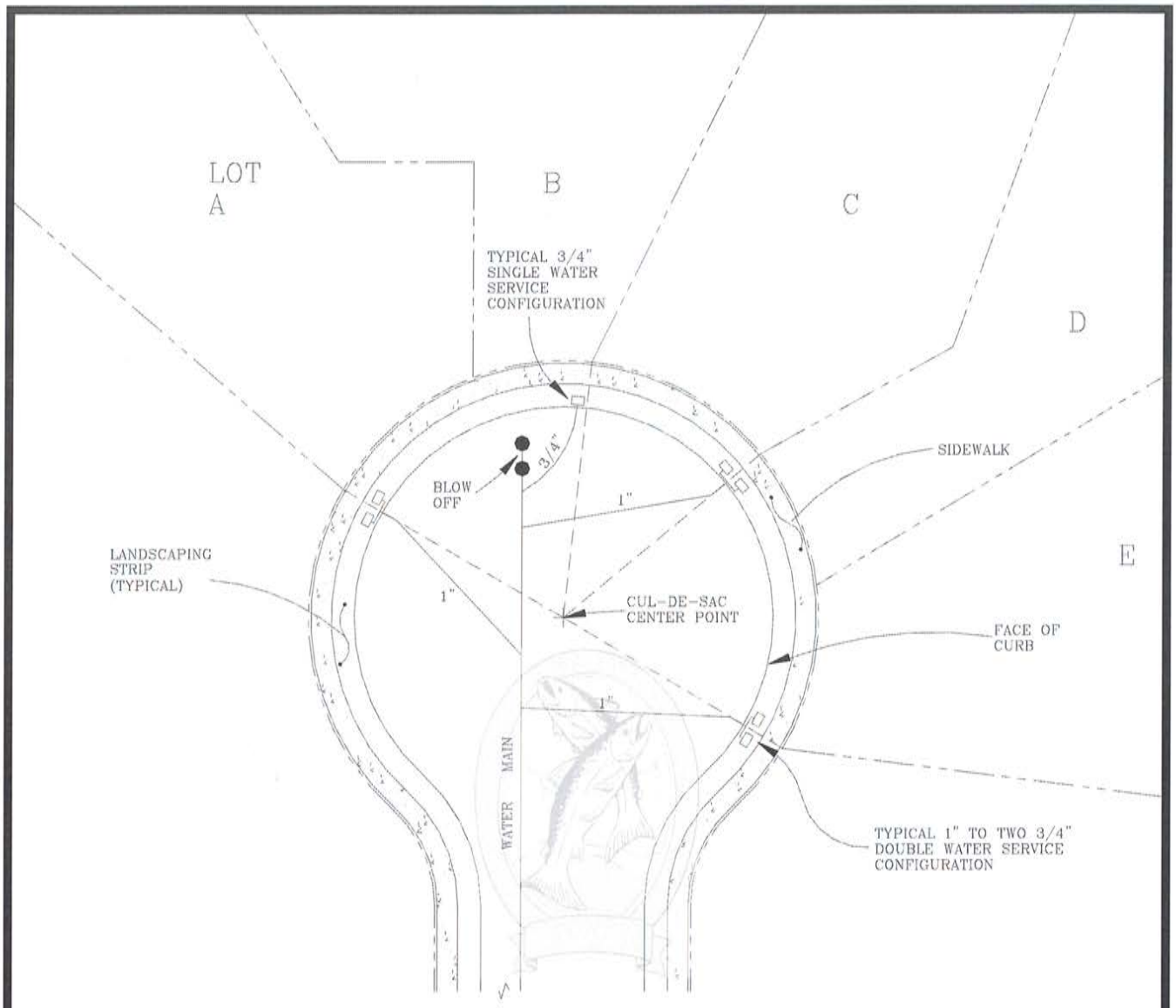


GENERAL NOTES:

1. LOCATION OF THE METERS AND METER BOXES MUST BE WITH THE SIDES OF THE BOXES PARALLEL TO AN IMAGINARY LINE (SHOWN ABOVE AS DASHED LINES) EXTENDING FROM THE PROPERTY CORNER OF THE RESPECTIVE LOT IN THE CUL-DE-SAC TO THE CENTER POINT OF THE CUL-DE-SAC.
2. REFER TO DRAWING IV-9 FOR FURTHER DETAIL.

CITY OF TROUTDALE

*IN CUL-DE-SAC DOUBLE & SINGLE WATER SERVICE CONFIGURATION*

| DATE: | DRAWING NO. |
|---|---|
| UPDATED 1997 | IV - 10 |

FILENAME: APWA0137.DWG

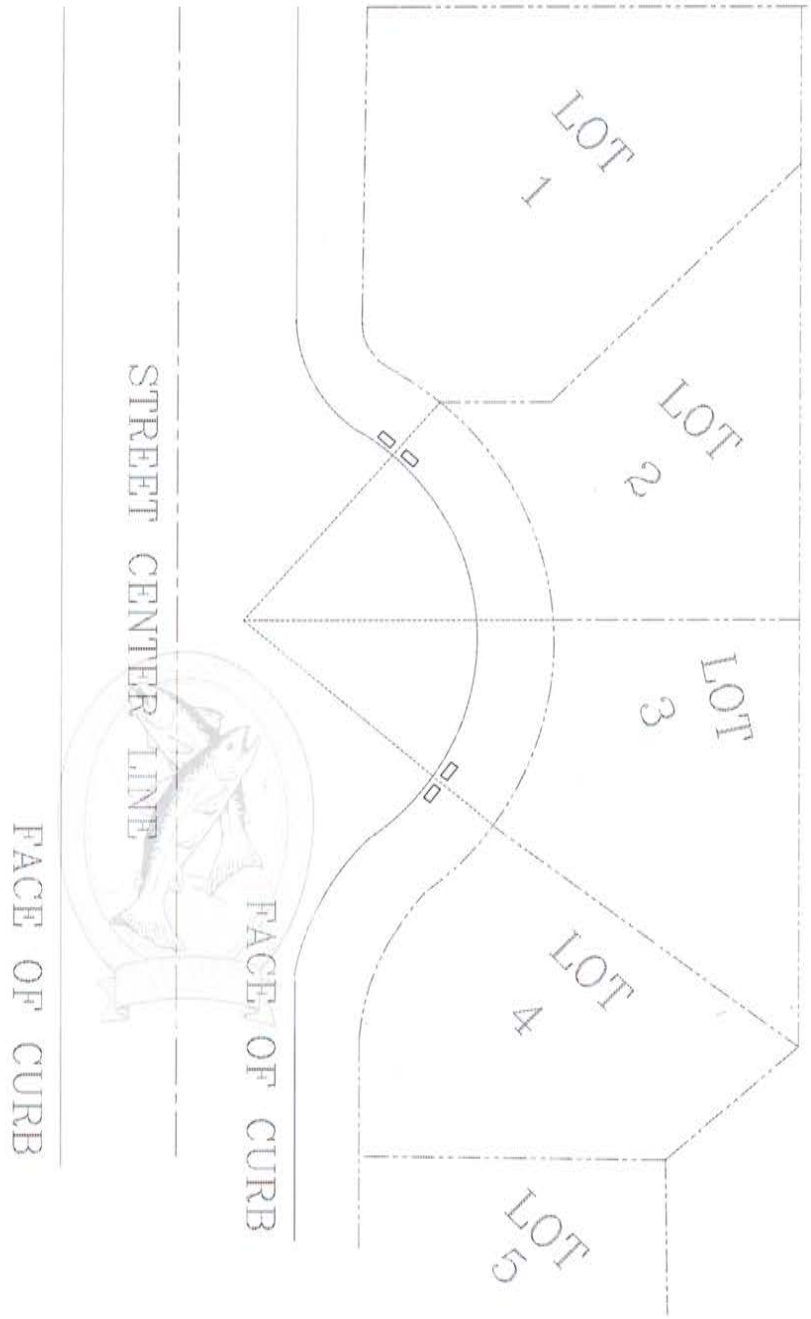


NOTES:

METER BOXES MUST BE PARALLEL TO AN IMAGINARY LINE DRAWN FROM THE PROPERTY CORNER TO THE RADIUS POINT OF THE HALF CUL-DE-SAC, AS SHOWN.

| | |
|---|---|
| CITY OF TROUTDALE | |
| *IN-HALF CUL-DE-SAC* | |
| ***DOUBLE/SINGLE SERVICE CONFIGURATION*** | |
| DATE: UPDATED 1997 | DRAWING NO. IV - 11 |

FILENAME: APWA0141.DWG

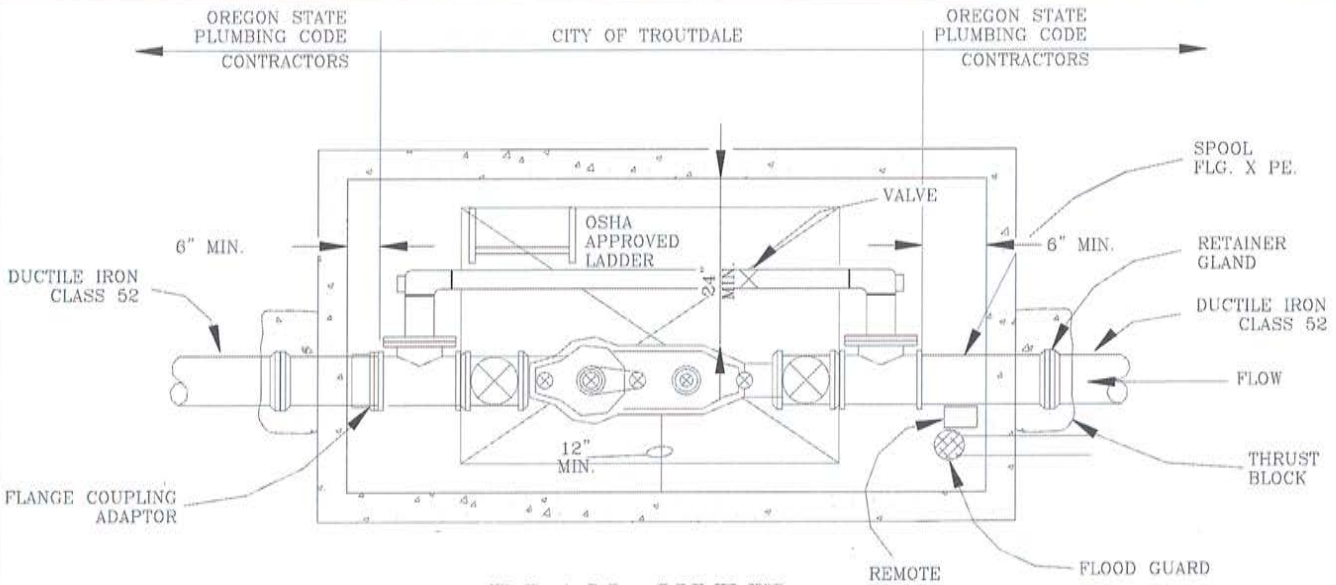


PLAN VIEW

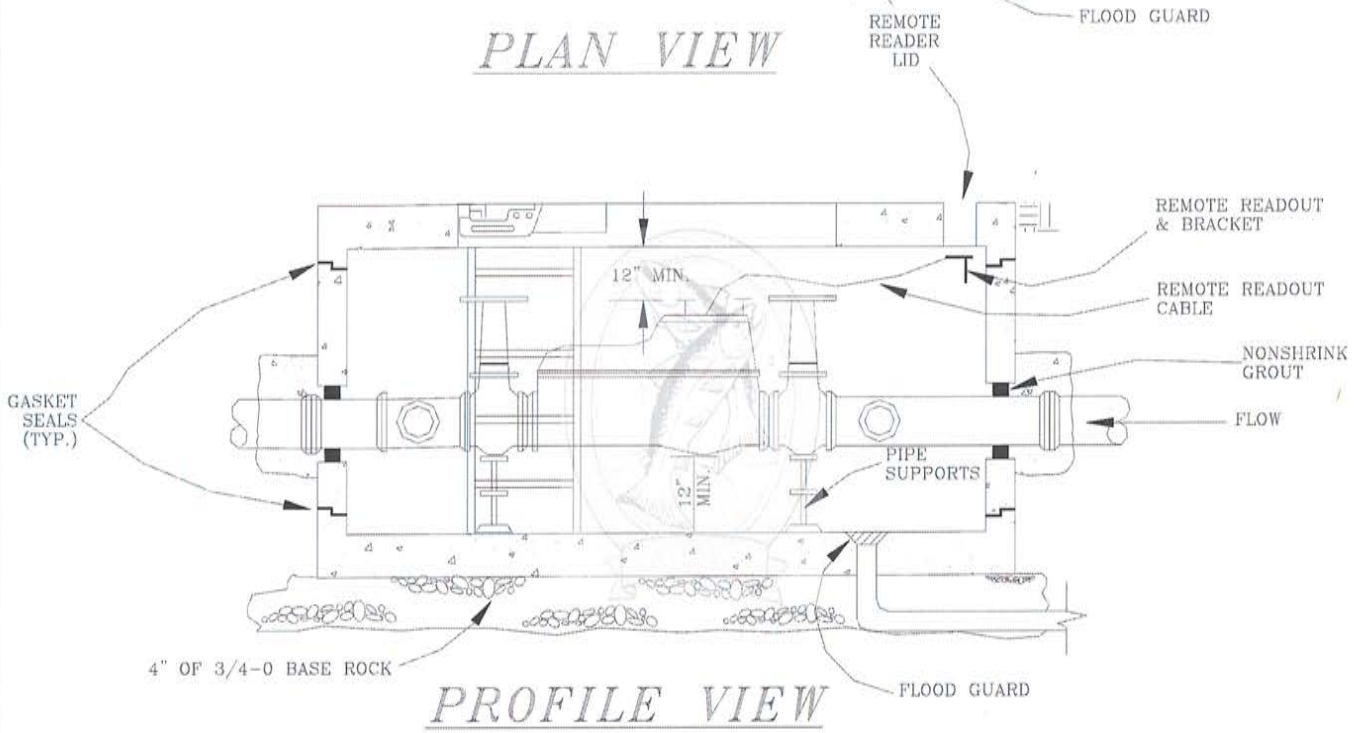


PROFILE VIEW

GENERAL NOTES:

1. THE INSTALLATION/REMOVAL OF EQUIPMENT IN VAULT WILL DETERMINE THE NUMBER OF DOORS REQUIRED. DOORS SHALL BE GALVANIZED DIAMOND PLATE AND SPRING ASSISTED W/H-20 RATING FOR TRAFFIC AREAS; AND, H-10 RATING FOR LANDSCAPED AREAS. CONTRACTOR TO VERIFY NUMBER OF DOORS.

2. ALL VAULTS SHALL DRAIN TO STORM SYSTEM WHEN POSSIBLE. WHEN NOT, A FRENCH DRAIN FACILITY NEAR THE VAULT MUST BE PROVIDED.

3. REFER TO DRAWING # IV - 14 FOR BYPASS PLUMBING DETAILS; AND, TO DRAWING # IV - 13 FOR ADDITIONAL INFORMATION ON THE REMOTE READER. TYPE OF SERVICE WILL DETERMINE IF METER BYPASS PLUMBING IS NECESSARY.

4. TYPE OF VAULT REQUIRED WILL BE DETERMINED AS FOLLOWS: NOTE, VAULTS WITH REMOTE READOUTS NEED TO HAVE LIDS WITH BROOKS 37 READER LIDS IN THEM.

| SIZE | VAULT SIZE (OR EQUAL) |
|---|---|
| 3" | 676-WA |
| 4" | 687-WA |
| 6" | 687-WA |
| 8" | 810-LA |

NOTE: 2" METER WITH BYPASS VAULT MUST MEET MINIMUM CLEARANCES.

5. ALL SERVICE LINES GREATER IN SIZE THAN 1" SHALL HAVE A DOUBLECHECK BACKFLOW PREVENTION DEVICE AS MINIMUM PROTECTION.

6. LADDER LOCATION DEPENDS ON APPLICATION. FIELD APPROVAL NEEDED FOR LADDER LOCATION.

7. VAULTS WITH AN ELECTRICAL PANEL SHALL COMPLY WITH THE MOST RECENT ADOPTED CODE(S) FOR WORKMANSHIP AND MATERIALS. ELECTRICAL PERMITS AND SUBSEQUENT INSPECTIONS ARE REQUIRED.

CITY OF TROUTDALE

# 3" DIAMETER (& LARGER) WATER METER VAULT

DATE: UPDATED 1997

DRAWING NO. IV - 12

FILENAME: APWA0123.DWG

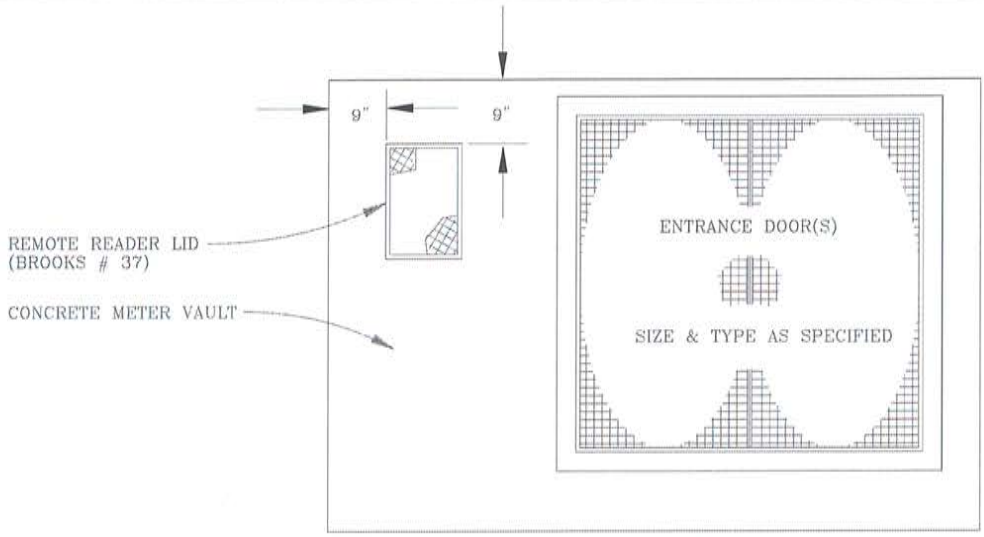


PLAN VIEW

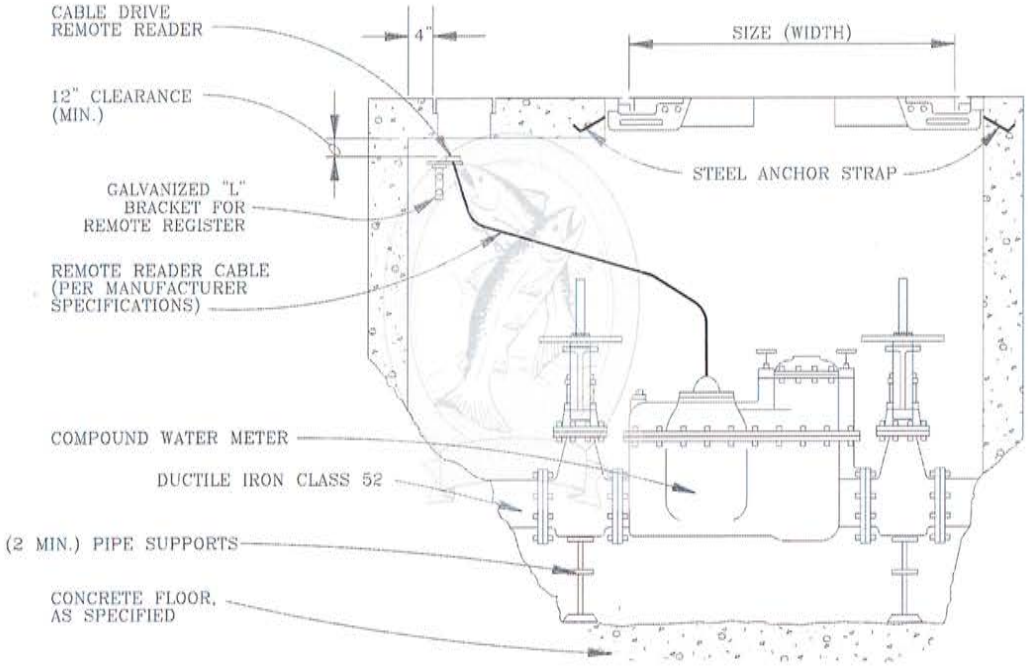


ELEVATION VIEW

GENERAL NOTES:

1. THE INSTALLATION/REMOVAL OF EQUIPMENT IN VAULT WILL DETERMINE THE NUMBER OF DOORS REQUIRED. CONTRACTOR TO VERIFY NUMBER OF DOORS.
2. ALL VAULTS SHALL DRAIN TO STORM SYSTEM WHEN POSSIBLE. WHEN NOT, A FRENCH DRAIN FACILITY NEAR THE VAULT MUST BE PROVIDED.
3. DOORS SHALL BE GALVANIZED DIAMOND PLATE AND SPRING ASSISTED W/H-20 RATING FOR TRAFFIC AREAS; AND, H-10 RATING FOR LANDSCAPED AREAS.
4. REFER TO DRAWING # IV - 14 FOR BYPASS PLUMBING DETAILS.
5. TYPE OF VAULT REQUIRED WILL BE DETERMINED AS FOLLOWS: NOTE, VAULTS WITH REMOTE READOUTS NEED TO HAVE LIDS WITH BROOKS 37 READER LIDS IN THEM.

| SIZE | VAULT SIZE (OR EQUAL) |
|---|---|
| 3" | 676-WA |
| 4" | 687-WA |
| 6" | 687-WA |
| 8" | 810-LA |

6. TYPE OF SERVICE WILL DETERMINE IF METER BYPASS PLUMBING IS NECESSARY.
7. ALL SERVICE LINES GREATER IN SIZE THAN 1" SHALL HAVE A DOUBLECHECK BACKFLOW PREVENTION DEVICE AS MINIMUM PROTECTION.

CITY OF TROUTDALE

# METER WITH REMOTE READER AND VAULT

DATE: UPDATED 1997

DRAWING NO. IV - 13

FILENAME: APWA0046.DWG

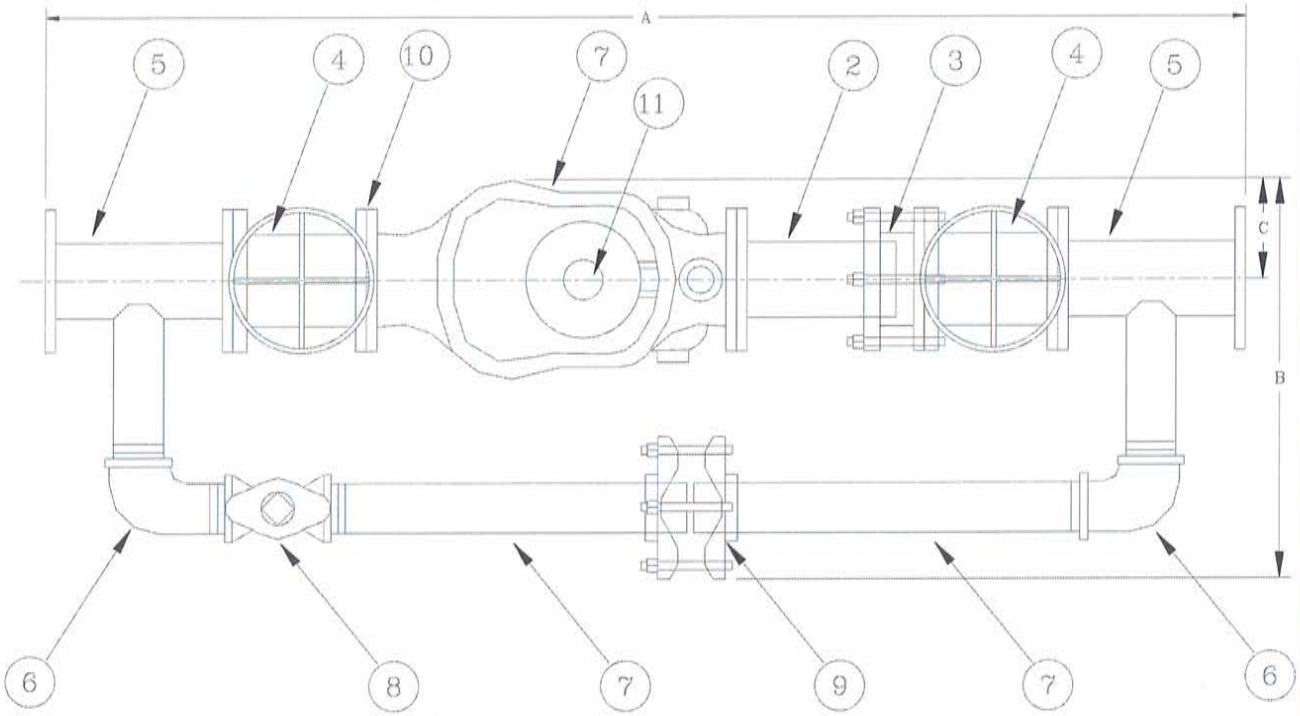


1. Spool Piece
2. Adapter
3. Valves
4. Reducing Tee
5. 90° Elbow
6. Bypass Piping
7. Coupling
8. Bypass Valve
9. Adapter Spool (12" size only)
10. Gallon Register

GENERAL NOTES:

1. Type of service determines if meter bypass plumbing is necessary.
2. All meters must be pre-approved by the City.
3. Installation must be restrained to resist axial forces due to internal pressure/flow.
4. Dimensions are in inches.
5. Elbows may be screwed or butt-weld flange, depending on size.
6. Valves may be ball or gate type, depending on size.
7. Meter vault must be approved by the City.
8. Meter test connections required on all 2" meters or larger.

| DIMENSIONS | DUCTILE IRON | | | BRONZE |
|---|---|---|---|---|
| SIZE: | 3" | 4" | 6" | 2" |
| A. Overall Length | 63 | 73 | 86 | 45 |
| B. Overall Width | 19 | 21 | 26 | 17 1/2 |
| C. Width, to Mainline Edge | 4 | 5 | 6 | 6 |
| Mainline to Max. Edge | 16 | 17 | 21 | 15 |
| Mainline to Bottom Surface | 4 | 4.75 | 5.75 | 3 3/16 |
| Bypass Size | 3 | 3 | 4 | 2 |
| N.P.T. Test Connection | 2 | 2 | 2 | 1 1/2 |

CITY OF TROUTDALE

# WATER METER W/BYPASS DETAIL

DATE: UPDATED 1997

DRAWING NO. IV - 14

FILENAME: APWA0113.DWG

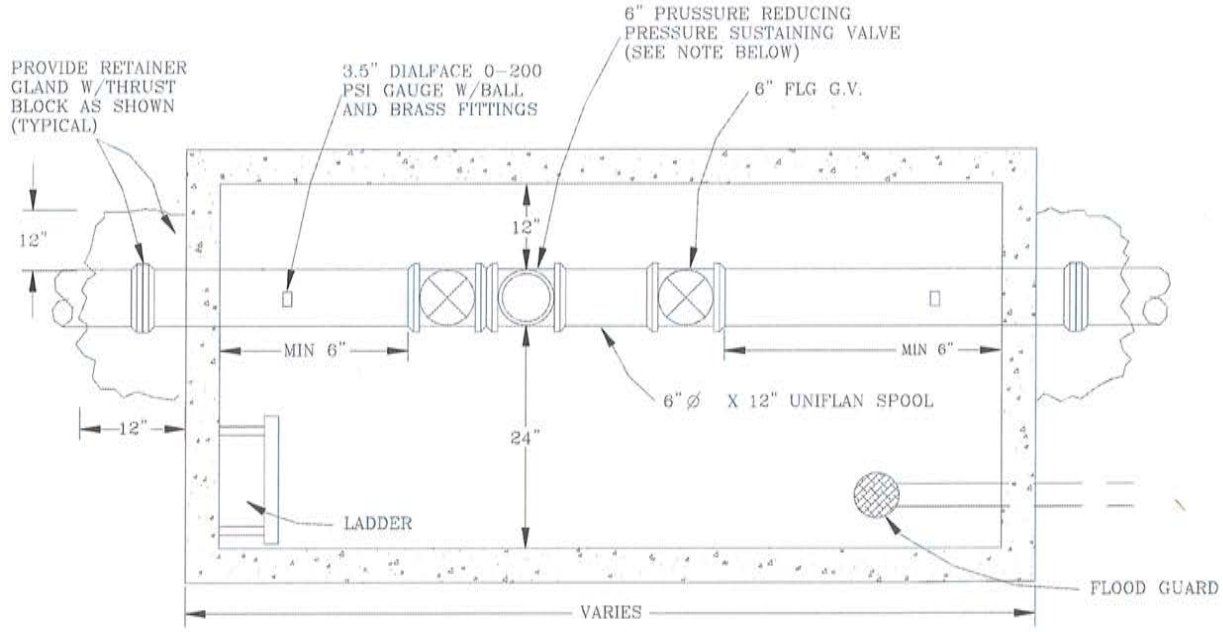


PLAN VIEW

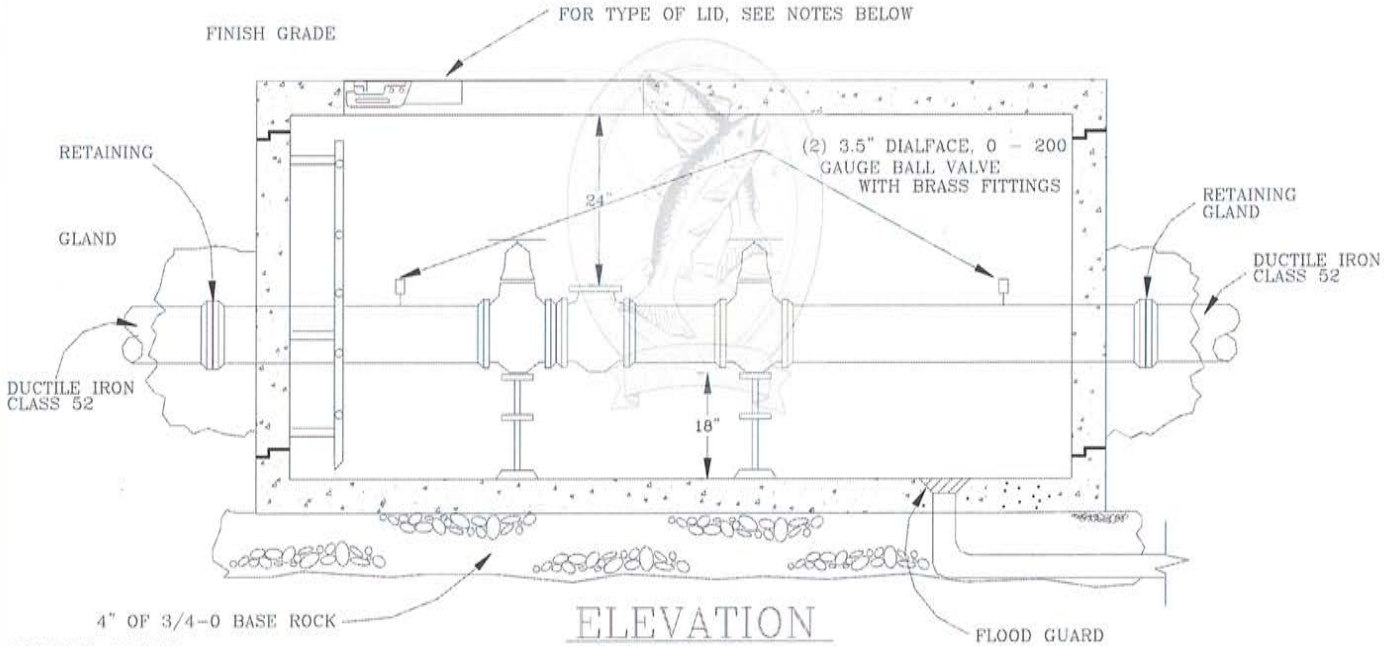


ELEVATION
NTS

GENERAL NOTES:

1. TYPE OF VAULT REQUIRED WILL BE DETERMINED AS FOLLOWS.

| SIZE | VAULT (OR EQUAL) |
|---|---|
| 3" | 676-WA |
| 4" | 687-WA |
| 6" | 687-WA |
| 8" | 810-LA |

2. LADDER LOCATION DEPENDS ON APPLICATION. FIELD APPROVAL NEEDED FOR LADDER LOCATIONS.
3. AUTOMATIC VALVE SHOULD BE IN PRESSURE REDUCING/ PRESSURE SUSTAINING CONFIGURATION. WILL REQUIRE A CLAYTON AUTOMATIC VALVE BY CLA-VAL COMPANY. PILOT CONTROL SHOULD BE 20-200 PSI. VALVE RATING SHOULD BE 150 ANSI/B16.7
4. THE INSTALLATION/REMOVAL OF EQUIPMENT IN VAULT WILL DETERMINE THE NUMBER OF DOORS REQUIRED.
5. ALL VAULTS SHALL DRAIN TO STORM SYSTEM WHEN POSSIBLE. WHEN NOT, A FRENCH DRAIN FACILITY NEAR THE VAULT MUST BE PROVIDED.
6. DOORS SHALL BE GALVANIZED DIAMOND PLAT AND SPRING ASSISTED W/H-20 RATING FOR TRAFFIC AREAS; AND, H-10 RATING FOR LANDSCAPED AREAS.

CITY OF TROUTDALE

*PRESSURE REGULATING VAULT*

DATE: UPDATED 1997

DRAWING NO. IV - 15

FILENAME: APWA0102.DWG

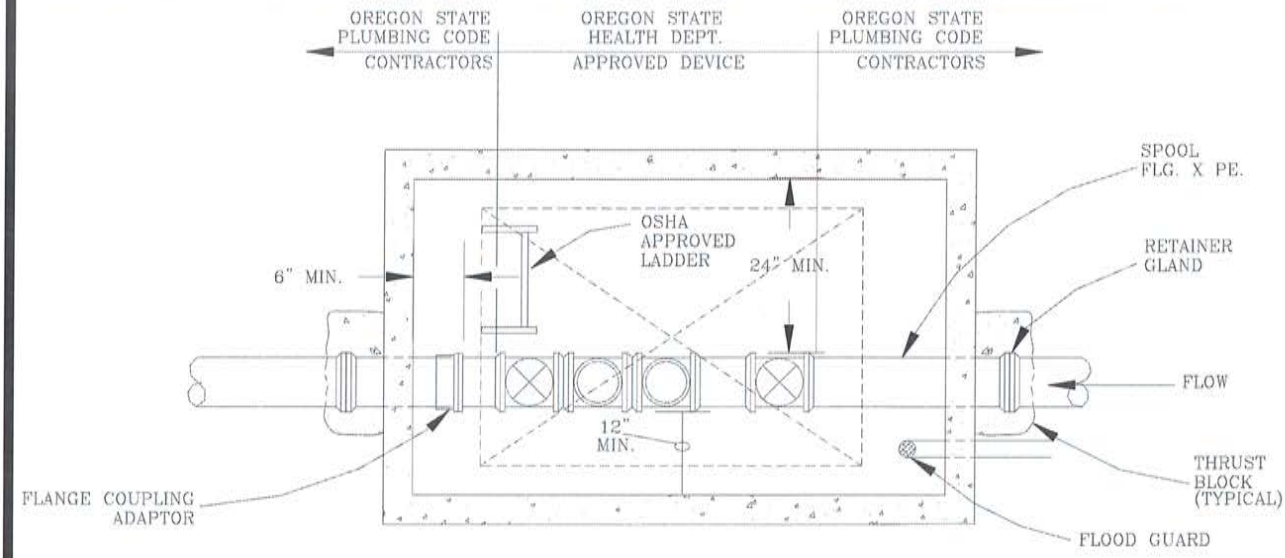


PLAN VIEW

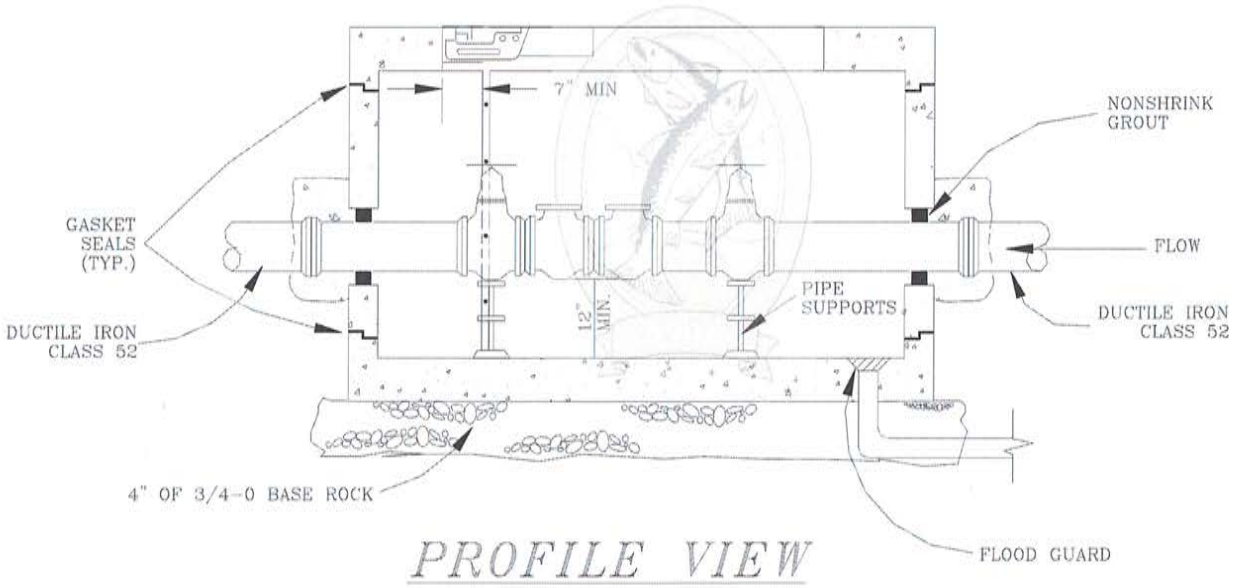


PROFILE VIEW

GENERAL NOTES:

1. THE INSTALLATION/REMOVAL OF EQUIPMENT IN VAULT WILL DETERMINE THE NUMBER OF DOORS REQUIRED.
2. DCVA'S MAY BE INSTALLED BELOW GRADE IN A VAULT PROVIDED PLUGS ARE INSTALLED IN THE TEST COCKS & ADEQUATE DRAINAGE IS PROVIDED. DEVICES SHALL NOT BE SUBJECT TO CONTINUOUS IMMERSIONS.
3. DOORS SHALL BE GALVANIZED DIAMOND PLATE AND SPRING ASSISTED W/H-20 RATING FOR TRAFFIC AREAS; AND, H-10 RATING FOR LANDSCAPED AREAS.
4. D.C. BACKFLOW DEVICES USED FOR FIRE STANDBY, REQUIRE A DETECTOR CHECK METER AND BACKFLOW DEVICE.
5. USE ONLY OREGON STATE HEALTH DIVISION APPROVED BACKFLOW DEVICES.
6. TYPE OF VAULT REQUIRED WILL BE DETERMINED AS FOLLOWS:

| D.D.C SIZE | VAULT SIZE WITH F.D.C. | VAULT SIZE WITHOUT F.D.C. | H-20 GALV. DOOR SIZE |
|---|---|---|---|
| 4" | 676-WA | 577-LA | 36" X 36" |
| 6" | 687-WA | 676-WA | 36" X 36" |
| 8" | 5106-LA | 687-WA | 36" X 36" |
| 10" | 5106-LA | 5106-LA | 36" X 36" |

7. LADDER LOCATION DEPENDS ON APPLICATION. FIELD APPROVAL NEEDED FOR LADDER LOCATIONS.

CITY OF TROUTDALE

DOUBLE CHECK BACKFLOW PREVENTOR DEVICE VAULT

DATE: UPDATED 1997

DRAWING NO. IV - 16

FILENAME: APWA0122.DWG

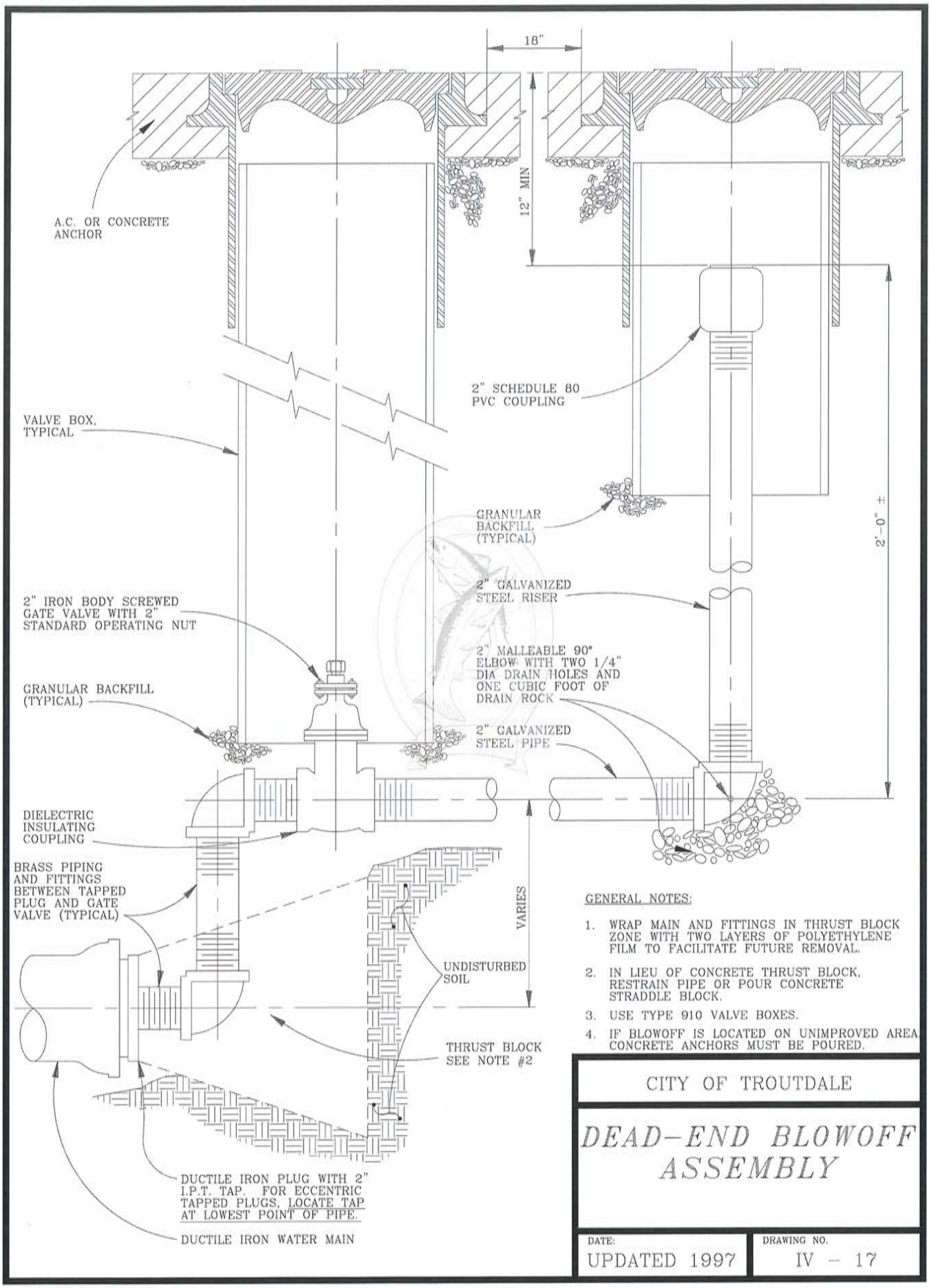


FILENAME: APWA0039.DWG

2. Water, Part IV, Construction Details, Drawing No. IV-17 is amended as follows:

SEE IC#38 The following general note is added: Fire hydrant assemblies are required at all dead dead-end water mains of 6" diameter and greater. Blow-off assemblies are required at all dead-end water mains of 4" diameter or less.

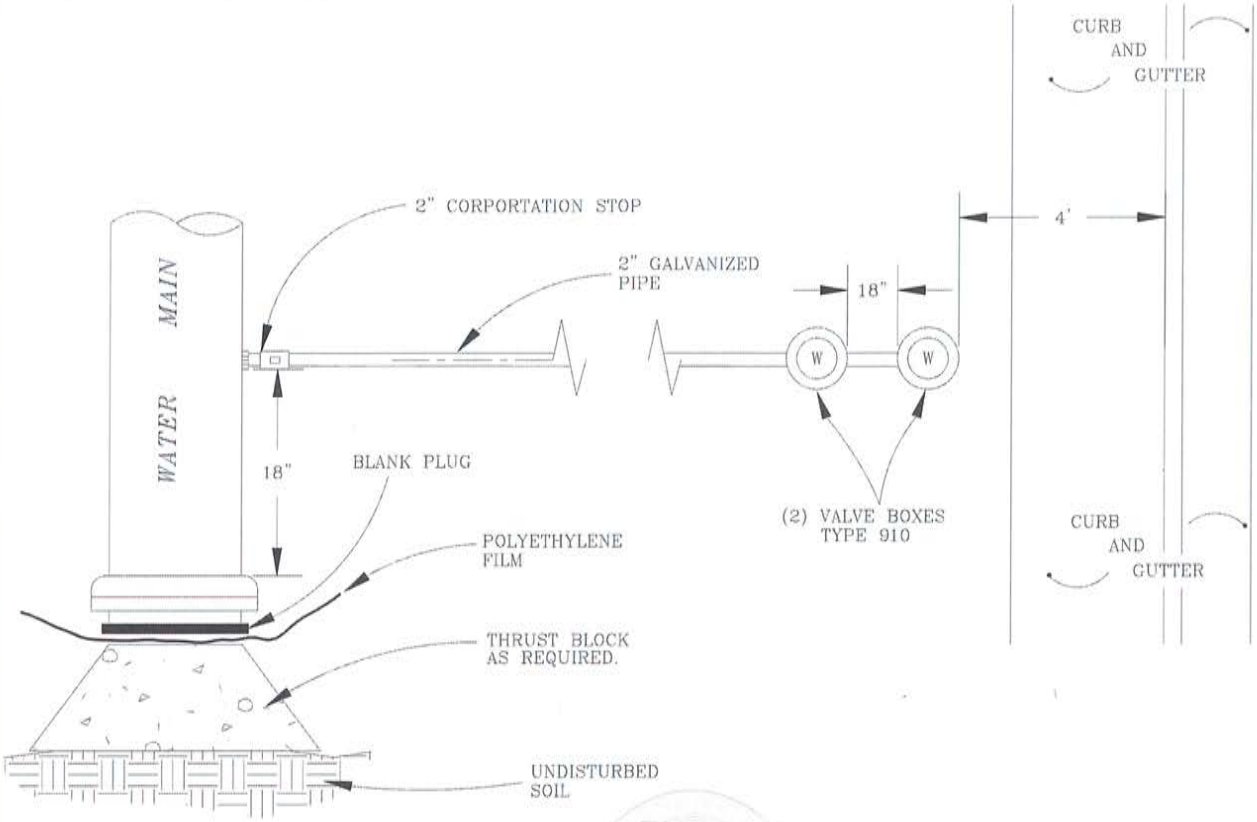


PLAN VIEW

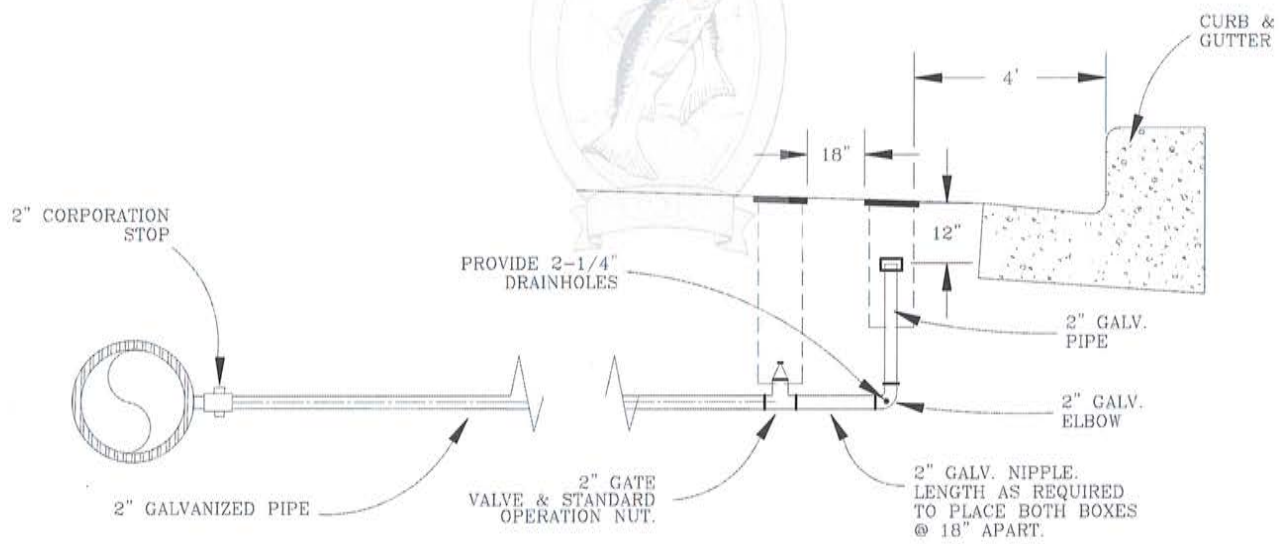


PROFILE VIEW

GENERAL NOTES:

1. WRAP MAIN & FITTINGS IN THRUST BLOCK ZONE W/TWO LAYERS OF POLYETHYLENE FILM TO FACILITATE FUTURE REMOVAL.
2. A STRADDLE BLOCK IS REQUIRED IF WATER MAIN WILL BE EXTENDED IN THE FUTURE. REFER TO DRAWING # IV - 1 FOR DETAILS.
3. USE VALVE BOXES TYPE 910.
4. IF BLOWOFF HAS TO BE LOCATED ON UNIMPROVED SURFACES, A CONCRETE ANCHOR IS REQUIRED.
5. FOR ADDITIONAL DETAIL, PLEASE REFER TO DRAWING # IV - 15. ASSEMBLY.

CITY OF TROUTDALE

# IN-LINE BLOWOFF ASSEMBLY

| DATE: | DRAWING NO. |
|---|---|
| UPDATED 1997 | IV - 18 |

FILENAME: APWA0128.DWG

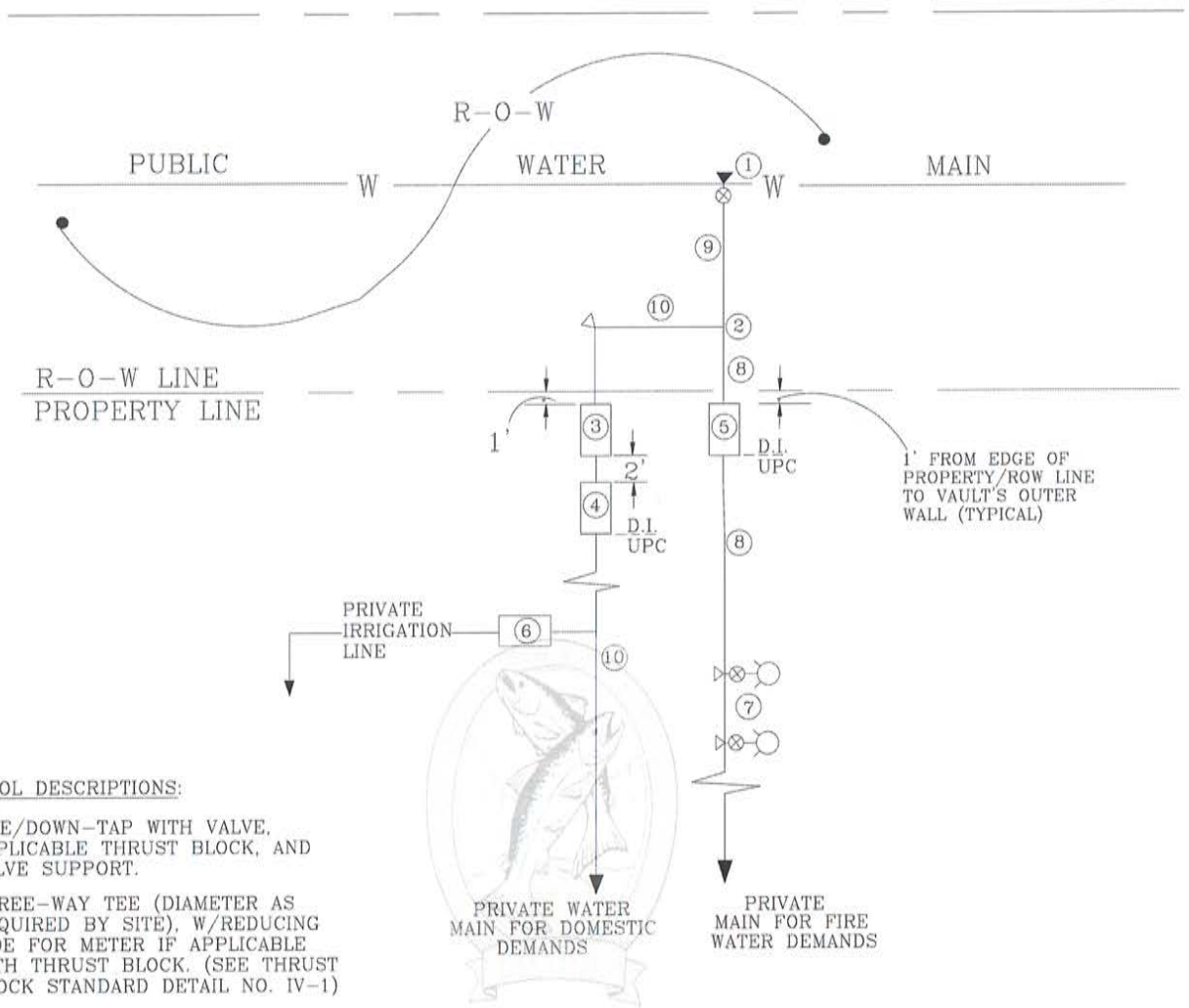


SYMBOL DESCRIPTIONS:

1. LIVE/DOWN-TAP WITH VALVE, APPLICABLE THRUST BLOCK, AND VALVE SUPPORT.
2. THREE-WAY TEE (DIAMETER AS REQUIRED BY SITE), W/REDUCING SIDE FOR METER IF APPLICABLE WITH THRUST BLOCK. (SEE THRUST BLOCK STANDARD DETAIL NO. IV-1)
3. MAIN MASTER METER WITH BYPASS PLUMBING AND RESPECTIVE VAULT. (SEE STANDARD DETAIL NO. IV-12, IV-13 AND IV-14)
4. BACKFLOW PREVENTION DEVICE WITH RESPECTIVE VAULT.
5. DOUBLE DETECTOR CHECK BACKFLOW PREVENTION DEVICE. (SEE STANDARD DETAIL NO. IV-16)
6. IRRIGATION BACKFLOW PREVENTION DEVICE WITH RESPECTIVE VAULT, IF APPLICABLE.
7. FIRE HYDRANT ASSEMBLY (HYDRANTS TO BE PRIVATELY OWNED UNDER THIS CONFIGURATION). (SEE STANDARD DETAIL NO. IV-2 OR IV-3)
8. WATER MAIN FOR FIRE DEMAND. DIAMETER AS REQUIRED BY SITE AND AS INDICATED BY THE DEVELOPER'S PROJECT ENGINEER.
9. WATER MAIN TO SERVE SITE. DIAMETER AS REQUIRED BY SITE AND AS INDICATED BY THE DEVELOPER'S PROJECT ENGINEER.
10. WATER MAIN TO SERVE DOMESTIC DEMAND. DIAMETER AS REQUIRED BY SITE AND AS REQUIRED BY THE DEVELOPER'S PROJECT ENGINNER.

GENERAL NOTES:

- MATERIALS USED MUST BE D.I. (DUCTILE IRON), CLASS 52, FROM THE TAP TO THE PROPERTY SIDE OF THE BACKFLOW PREVENTION DEVICE VALVE VAULT. UPC-ALLOWED MATERIALS FROM THERE IN.
- EXACT TAP LOCATION POINT TO THE PUBLIC MAIN IS TO BE DETERMINED BY CITY FORCES.

CITY OF TROUTDALE

COMMERCIAL/INDUSTRIAL

WATER SERVICE CONFIGURATION

| DATE: | DRAWING NO. |
|---|---|
| UPDATED 1997 | IV - 19 |

FILENAME: APWA0010.DWG

# STORM

## (Part V)

## * General Requirements

# STORM SEWER COLLECTION SYSTEM

**(General Requirements)**

**See IC#35 for additional treatment requirements**

1. **Proposed storm sewer mains must be in accordance with the City of Troutdale's Public Facilities Plan. Main sizes must be adequately sized to handle the flow collected from the proposed development. Areas above and below the development must also be considered in design, and pipes sized accordingly.**

2. **All construction/installation of storm sewer mains shall be done in a safe, neat and professional manner, and under supervision by City forces at all times. All safety requirements from OSHA, and other State regulatory agencies must be met.**

3. **All requirements from DEQ must be met.**

Superseded see IC#15 P1

4. **Storm sewer design for subdivisions shall be based on a 10-year storm event in pre-development condition, and a 25-year storm event in post development conditions. Use either the rational and/or the Santa Barbara method to determine the storm water's rate of discharge and volume.**

5. **In no case will a storm sewer pipe less than 12 inches in diameter be approved, including catch basin leads. When locating catch basins near intersections, locate them outside the wheelchair ramp area to avoid conflict. Preferred location is at either end of the curb returns. Where possible, catch basin leads must be connected to a storm sewer manhole.**

Superseded see IC#16

6. **Rainfall intensity shall be based on the most current curves compiled by or for Multnomah County.**

Superseded see IC#15 P2

7. **Rainfall coefficients shall be based on the ultimate development planned or the land use shown in the City of Troutdale Comprehensive Plan.**

8. **Maximum catch basin spacing for street slopes of 1.0 to 4.0% is 300 feet; for slopes greater than 4.0%, 500 feet.**

9. **Provide a 7-inch curb exposure at all catch basin locations.**

10. **Combined sanitary and storm sewers are strictly prohibited.**

11. **Manholes shall be located at all alignment and pipe size changes, grade breaks and all street intersections, and spacing between manholes shall not exceed 300 feet.**

12. **Manholes shall have a minimum of 0.2 foot drop from pipe invert "in", to pipe invert "out", and storm lines between manholes shall meet the minimum allowable slope requirements as required by general engineering principles and DEQ's rules and regulations.**

13. **Invert elevations shall be adjusted so that pipe inverts match when pipe size changes occur at manholes. Channels are required to be poured in place as shown in the construction details section.**

14. **Pipe cover shall be 24 inches minimum from finished grade. If a shallower depth is required, pipe used must be D.I. and/or plastic encased in concrete. Either must be approved by the City during the design phase and prior to the start of construction.**

15. **Storm sewer systems shall have an outlet into a natural body of water, natural drainage channel, stream or previously constructed drain pipe, ditch, or detention facility. At the point of daylight, the daylight area must be adequately prepared to prevent soil erosion by placing rip-rap, hay bales, or other acceptable method as approved by the City (addressed in Part IX and X of these Construction Standards).**

16. **County and State permission is required to discharge into any County or State storm drain or roadside ditch. Whenever projects affect the jurisdiction of other agencies, a copy of the work permit and/or written authorization from those agencies is required by the City.**

17. **Dry wells are permitted only where shown on Drawing VI-10, and after soil tests (performed by a registered soils engineer) show that soils are suitable for subsurface disposal of storm water. Test results must be submitted to the City in writing for review and approval. Drywells shall not be allowed if a nearby storm main exists. The City must determine when drywells may or may not be constructed.**

18. **Minimum diameter allowed for storm sewer mains (including catch basin leads) shall be 12 inches and of concrete or ADS N-12 only. Compatible ADS N-12 fittings must be used with ADS N-12 storm pipe. Location of the storm sewer mains in the streets must be no less than five feet from the sanitary sewer and/or street centerline on the north and west sides of the sanitary sewer and/or street's centerline. See Drawing II-21 for further detail.**

19. **Minimum diameter allowed for storm laterals shall be 6-inches and of concrete or ADS N-12 only. All laterals shall be properly marked at ends as shown on Drawing VI-7.**

20. **All new storm sewer pipes and manholes must be thoroughly cleaned and pressure tested as required by the City. All tests must be witnessed and passed by the City prior to placing these facilities into operation. All ADS-N-12 pipe used must be of water-tight joints and may be pressure tested if so required by the City.**

21. **Connection to storm sewer mains with private storm sewer laterals hooked up to swimming pools, or other structures which may contain high contents of chlorine mixtures is strictly prohibited. Such materials, and all others which may contain strong chemical mixtures of any kind, shall be discharged directly into the sanitary sewer only. Approval to discharge such materials into the sanitary sewer must be pre-approved by the City.**

22. **All connections to existing storm sewer mains require issuance of a public works permit and inspection by the City prior to backfilling. A permit fee of $50.00 will be assessed for each connection/inspection.**

23. **If the slope of the land prevents lot surface and rain drain storm water from draining to the street through a curb weephole, a private storm water lateral must be provided by the developer/property owner, and marked as required if connection to the house will not be made at the same time.**

24. **Public storm sewer lines within streets will only be installed in public rights-of-way. Any storm sewer line installed within private streets will be privately owned and maintained. Public responsibility for the storm sewer collection system stops at the sewer main and does not include laterals to individual properties.**

25. **All public storm sewer mains extending into, under, above, through and beyond private property, shall be placed within a legal public utility easement granted to the City by the affected property owner(s). Width and length of such easement will be determined by the City, and will be based on size, type, depth and length of pipe being used. Building Code restrictions, as they apply to public utility easements, shall apply.**

26. **The builder/developer must provide to the City any guarantee or warranty normally furnished with the purchase of any materials used in connection with the project at hand. In addition, they must furnish the City a written warranty providing satisfactory in-service operation of all work performed by affected contractor (including but not limited to all storm mains, laterals, manholes, catch basins, grates, etc.) for a period of two (2) years following date of project acceptance.**

27. **All other construction practices (relating to storm sewer) within the City's public right-of-way, not covered in these "General Requirements" and/or "Construction Details" sections, shall comply with the rules and regulations found in the most recent edition(s) of the American Pubic Works Association Standard Specifications for Public Works Construction.**

28. **All new improvements proposed for construction and intended for public dedication (once these facilities are constructed to City standards) must be proposed to the City in writing, by the developer and/or legal owner of the project, prior to the receipt of an**

**authorization to begin construction from the City. This formal written request from the developer/owner to the City must be reviewed and approved by the City, and then signed by both parties to formally bind both parties to the agreement.**

Paragraph added - see IC#15 P3 - 9/20/16 Paragraph 3 of IC #15 RECINDED see IC#25 paragraph 1 for change.

# STORM

## (Part VI)

## * Construction Details

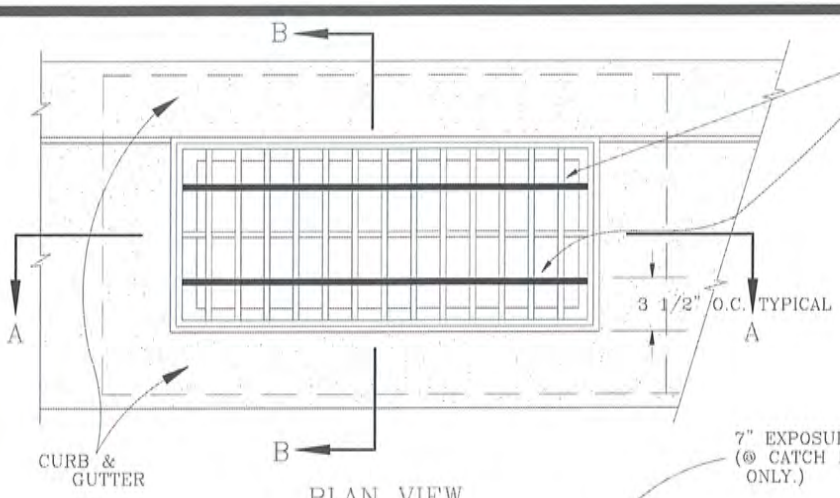


WELD TWO BICYCLE PROOF BARS 1" X 1/4" X 36", AS SHOWN

GENERAL NOTES:

1. CATCH BASIN MUST BE LOCATED OUTSIDE THE HANDICAP RAMP TO AVOID CONFLICT.
2. CONCRETE SHALL BE 3000, PSI, @ 28 DAYS.
3. ONLY CONCRETE MATERIAL SHALL BE USED FOR CONSTRUCTING CATCH BASINS.
4. CONNECT CATCH BASIN LEADS TO STORM MANHOLES WHEREVER POSSIBLE.
5. CATCH BASIN LEADS SHALL BE A MINIMUM OF 12 INCHES IN DIAMETER.
6. CATCH BASINS MUST BE PROTECTED FROM SILT AND SOIL EROSION BY USE OF BIO-FILTER BAGS (OR EQUAL) UNTIL THE SECOND LIFT OF A.C. IS PLACED.

PLAN VIEW

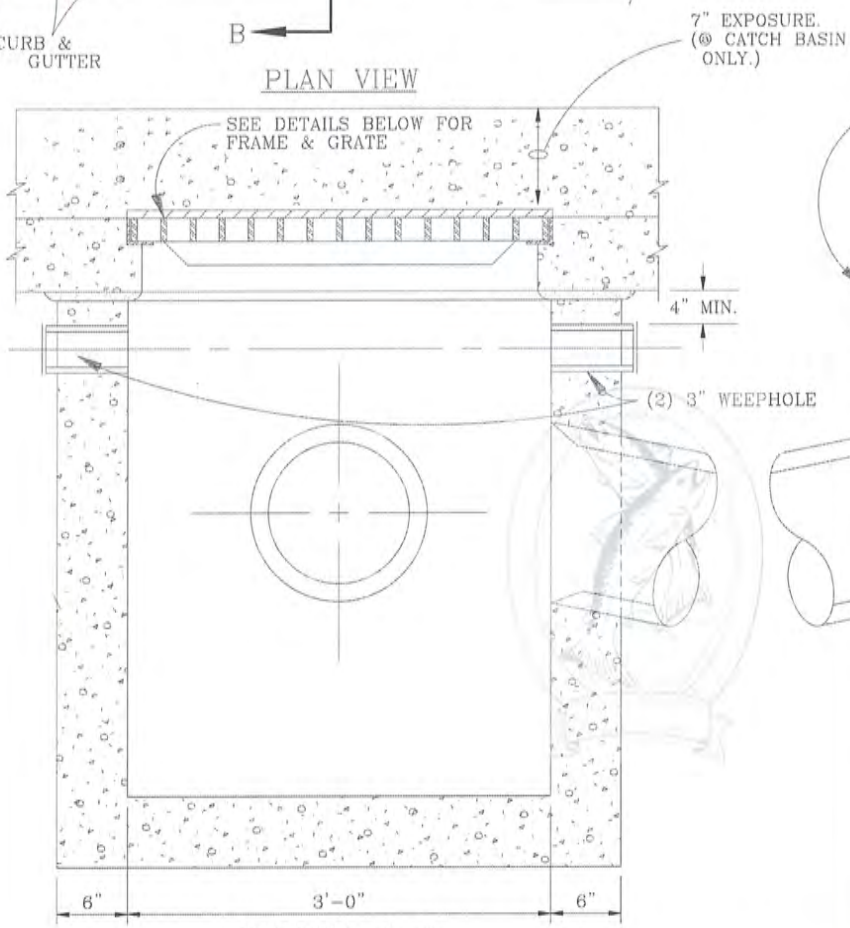


SECTION A-A

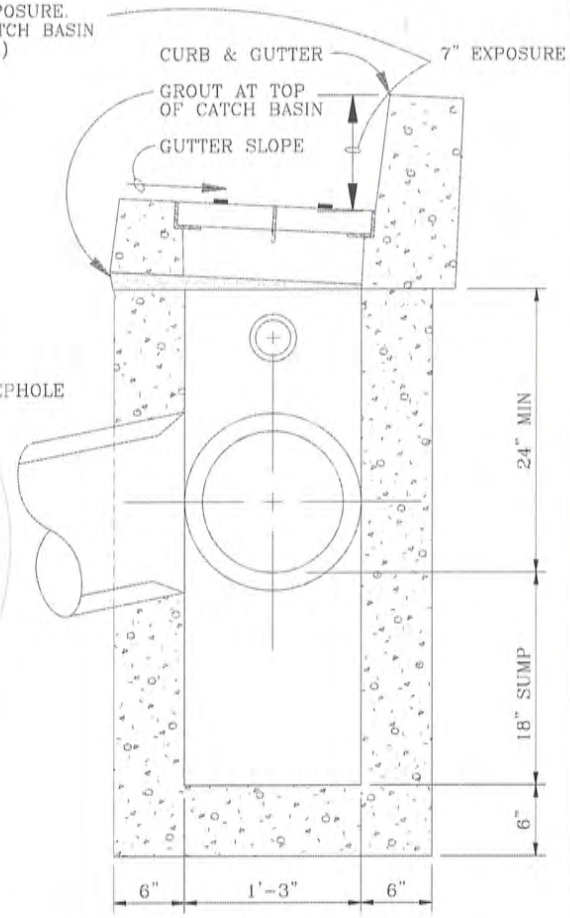


SECTION B-B

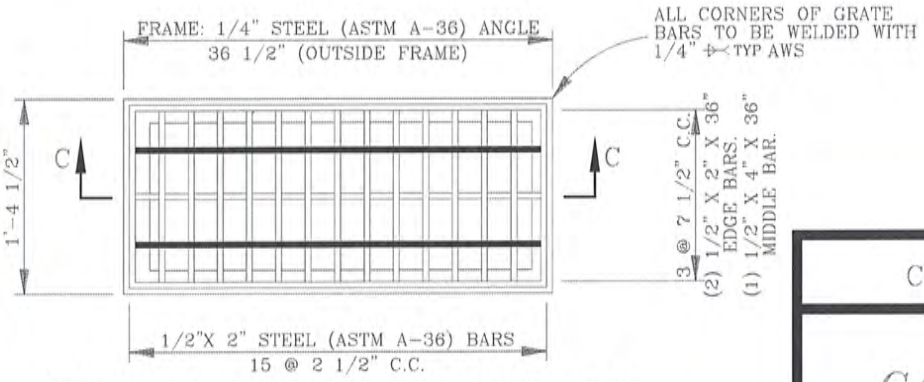


WELDED STEEL FRAME AND GRATE PLAN

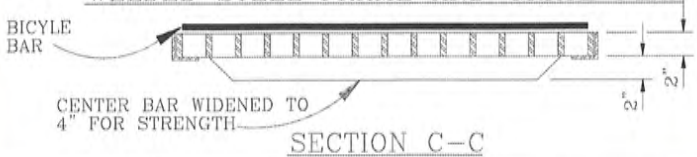


SECTION C-C

CITY OF TROUTDALE

# CATCH BASIN

| DATE: | DRAWING NO. |
|---|---|
| UPDATED 1997 | VI - 1 |

FILENAME: APWA0035.DWG

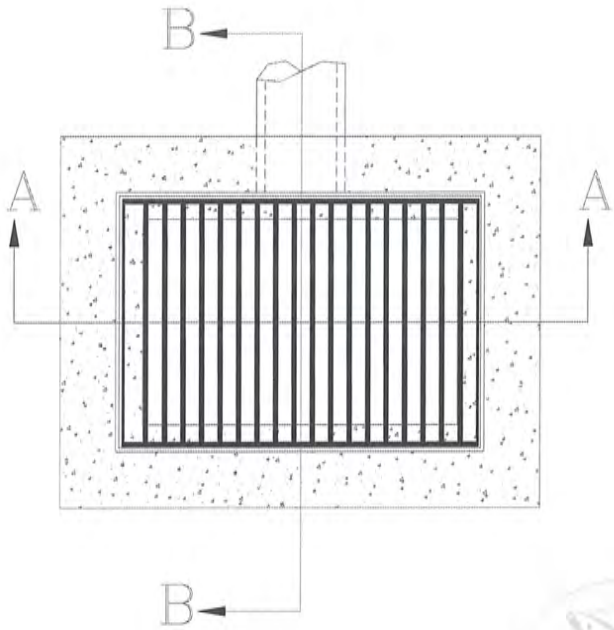


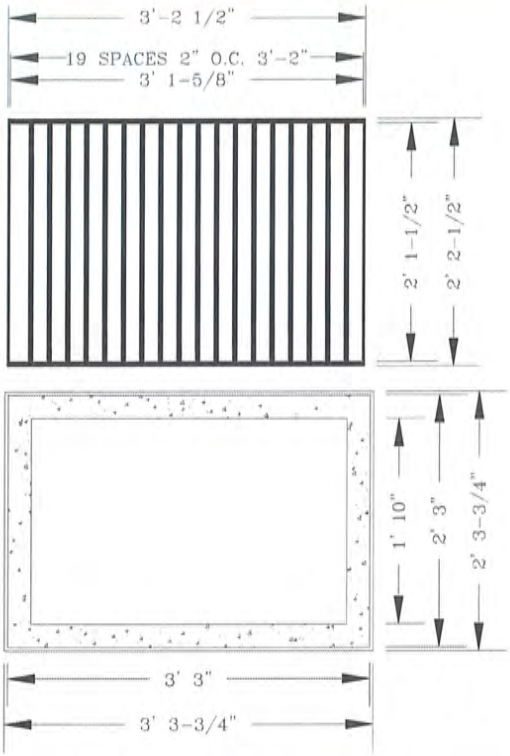


FRAME AND GRATE DETAIL

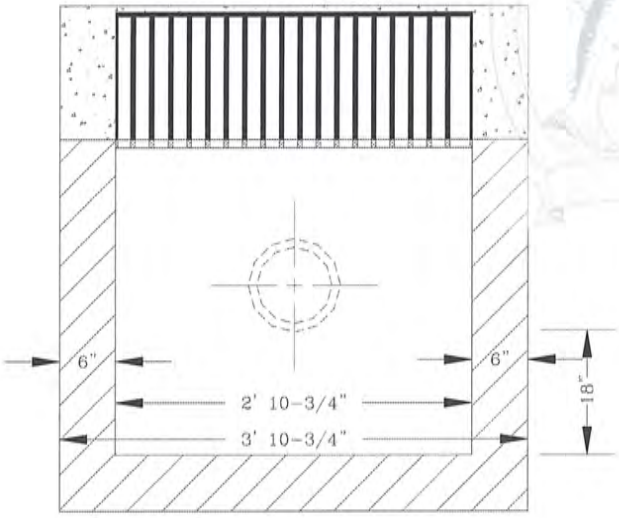


ELEVATION A-A

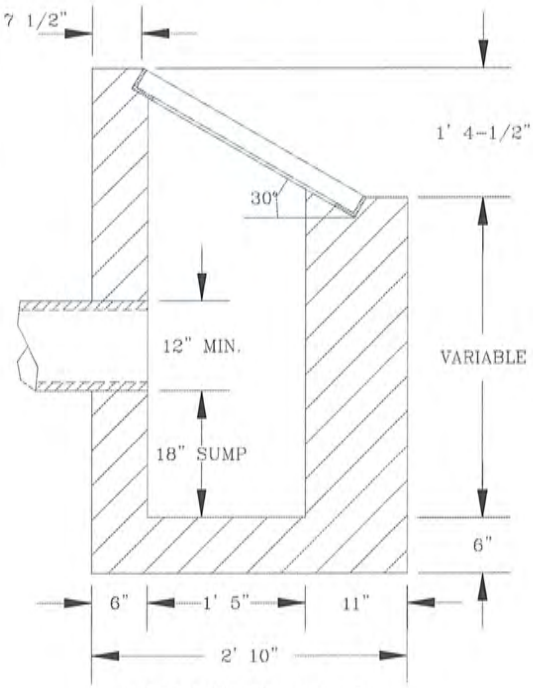


SECTION B-B

GENERAL NOTES:

1. EROSION CONTROL MEASURES MUST BE TAKEN TO PREVENT SILT FROM WASHING INTO DITCH INLET. USE RIP-RAP TO SLOW DOWN VELOCITY OF WATER & HAY BALES (OR OTHER METHODS AS APPROVED BY THE CITY) TO SETTLE OUT THE NATIVE SOILS.

CITY OF TROUTDALE

# DITCH INLET

| DATE: | DRAWING NO. |
|---|---|
| UPDATED 1997 | VI - 2 |

FILENAME: APWA0108.DWG

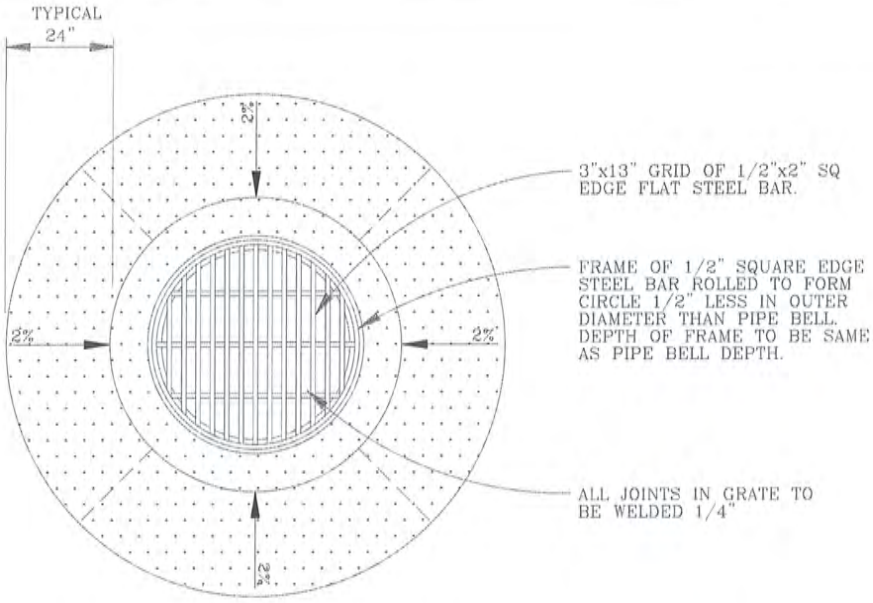


CONCRETE APRON = O.D. PIPE BELL + 24"

PLAN

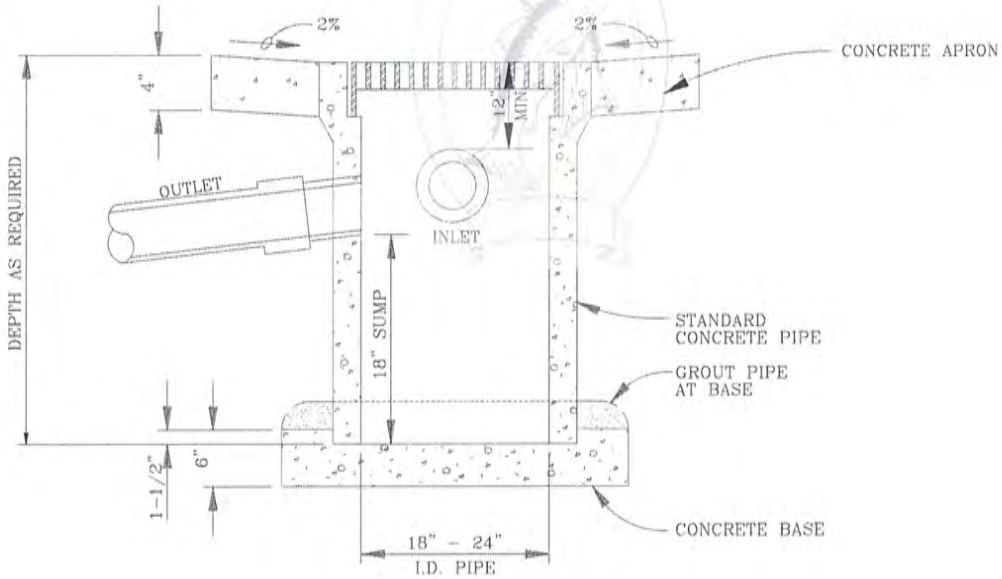


SECTION A-A

GENERAL NOTES:

1. GRATES SHALL BE CONSTRUCTED FOR BICYCLE SAFETY.
2. PRECAST CONCRETE CATCH BASINS MAY BE USED WHEN SPECIFIED OR APPROVED BY THE CITY.

CITY OF TROUTDALE

*FLAT AREA INLET*

*(IN UNIMPROVED SURFACES ONLY)*

| DATE: | DRAWING NO. |
|---|---|
| UPDATED 1997 | VI - 3 |

FILENAME: APWA0021.DWG

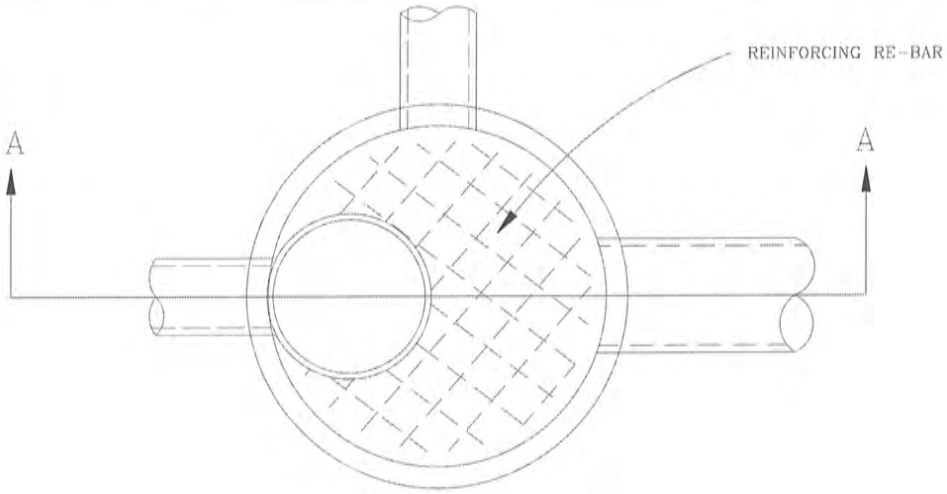


PLAN VIEW

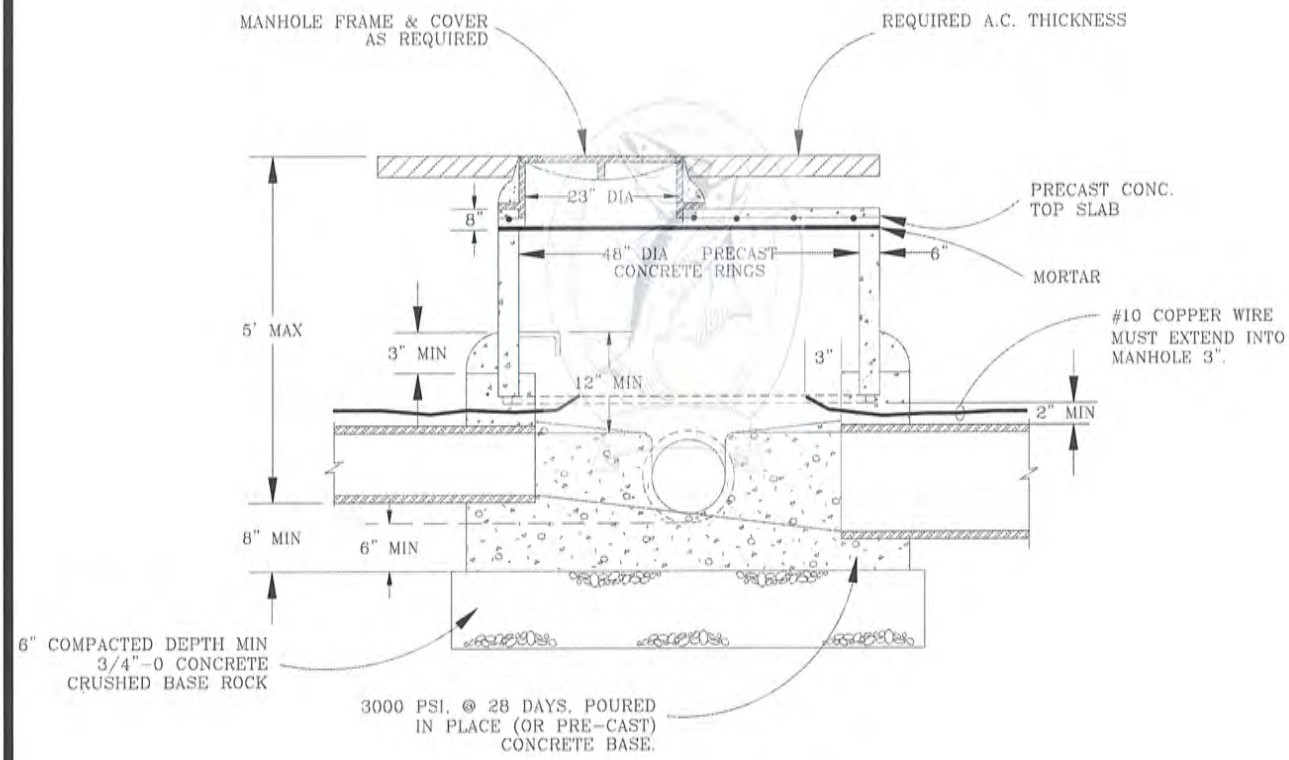


SECTION A-A

GENERAL NOTES:

1. PRECAST MANHOLE (OR POURED-IN-PLACE) BASES MAY BE USED. CHANNELS SHALL BE POURED IN PLACE.
2. FLAT TOP MANHOLES SHALL BE USED FOR STORM SEWER ONLY.
3. ALL STORM SEWER MANHOLES LOCATED ON UNPAVED ROAD SHOULDERS MUST BE ENCLOSED IN A 6'X6'X4" CONCRETE APRON (ON 2" OF CRUSHED ROCK), AROUND THE LID OF THE MANHOLE.
4. #10 COPPER TRACER WIRE INSTALLED DIRECTLY ABOVE THE MAIN MUST BE EXTENDED 3" INTO THE MANHOLE.
5. ONLY CONCRETE MANHOLES ARE ALLOWED (STORM & SANITARY)

CITY OF TROUTDALE

*FLAT TOP MANHOLE (STORM ONLY)*

| DATE: | DRAWING NO. |
|---|---|
| UPDATED 1997 | VI - 4 |

FILENAME: APWA0109.DWG

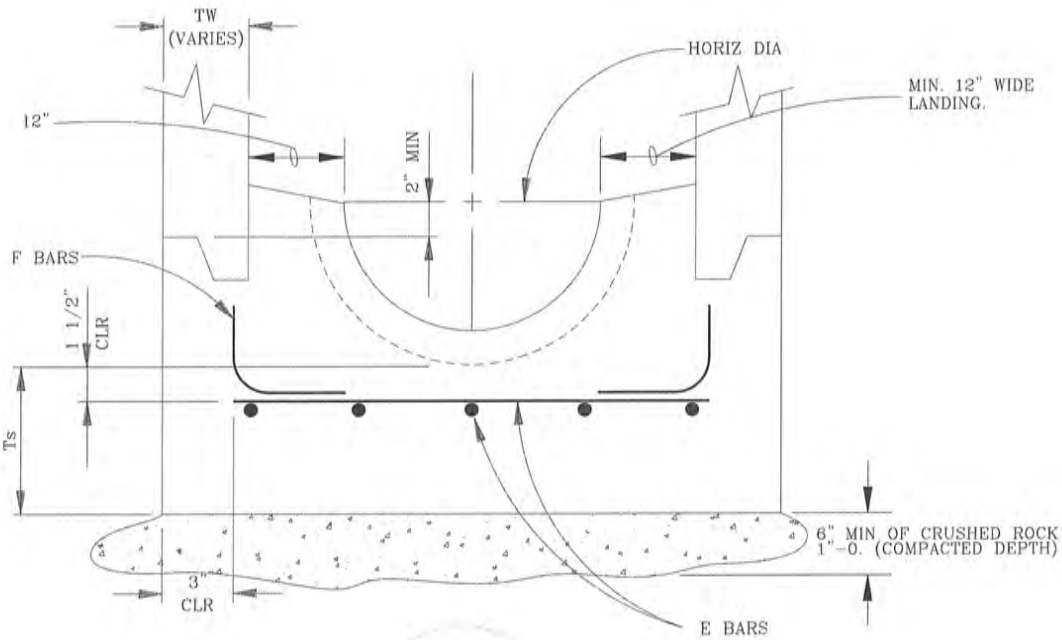


CAST-IN-PLACE BASE

| BASE I.D. | | 60" | | 72" | | 84" | | 96" | |
|---|---|---|---|---|---|---|---|---|---|
| TYPE | DEPTH* | 0'-15' | 15'-30' | 0'-15' | 15'-30' | 0'-15' | 15'-30' | 0'-15' | 15'-30' |
| CAST IN PLACE | Ts | 7.0" | 9.0" | 7.0" | 9.0" | 8.0" | 10.0" | 9.0" | 11.0" |
| | E BARS | #4 @ 12" | #4 @ 9" | #4 @ 9" | #4 @ 6" | #4 @ 8" | #5 @ 9" | #4 @ 7" | #5 @ 8" |
| | F BARS | #4 @ 12" | #4 @ 9" | #4 @ 9" | #4 @ 6" | #4 @ 8" | #5 @ 9" | #4 @ 7" | #5 @ 8" |

*INVERT TO STREET GRADE

GENERAL NOTES:

1. CONCRETE SHALL BE 3000 PSI. @ 28 DAYS. STEEL fg = GRADE 60.
2. INSIDE DIAMETER OF MANHOLE MUST BE WIDE ENOUGH TO ALLOW ENOUGH ROOM FOR A 12" LANDING ON BOTH SIDES OF PIPE CHANNEL.
3. MANHOLE BASES CAN BE POURED IN PLACE OR PRE-CAST. CHANNELS SHALL BE POURED IN PLACE.
4. LARGE MANHOLE BASES SHALL BE USED FOR PIPE SIZES LARGER THAN 24- INCHES.
5. MINIMUM BASE INSIDE DIAMETER SHALL BE BASED ON THE NUMBER AND SIZE OF PIPES ENTERING MANHOLE, THE ELEVATION OF PIPES, AND MINIMUM SPACING BETWEEN PIPES. MANHOLE BASE SIZE USED SHALL BE APPROVED BY THE CITY.
6. TOP OF MANHOLE SHALL BE AT 18" ABOVE FINISH GRADE IN UNPAVED SURFACES, AND PROPERLY MARKED (SEE MARKER POST DETAIL). IF IN GRAVELED ROAD OR SHOULDER, PLACE A 6' X 6'X 4" THICK CONCRETE APRON AROUND MANHOLE.
7. STORM MANHOLES SHALL HAVE A 16-HOLE LID AND SANITARY MANHOLES A 2-HOLE LID.
8. ALL MANHOLES WILL BE VACUUM TESTED PRIOR TO ACCEPTANCE. ALL TESTS MUST BE WITNESSED BY CITY FORCES.

CITY OF TROUTDALE

*LARGE CONCRETE STORM MANHOLE BASES*

DATE: UPDATED 1997

DRAWING NO. VI - 5

FILENAME: APWA0033.DWG

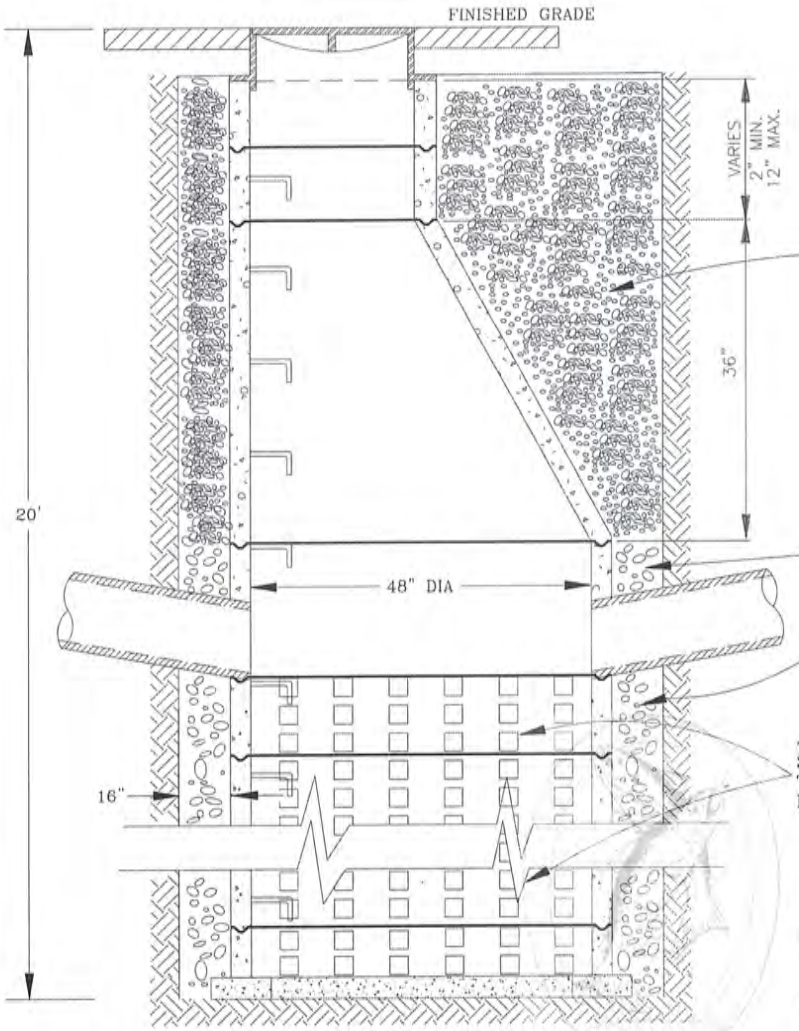


# TYPICAL DRYWELL DETAIL

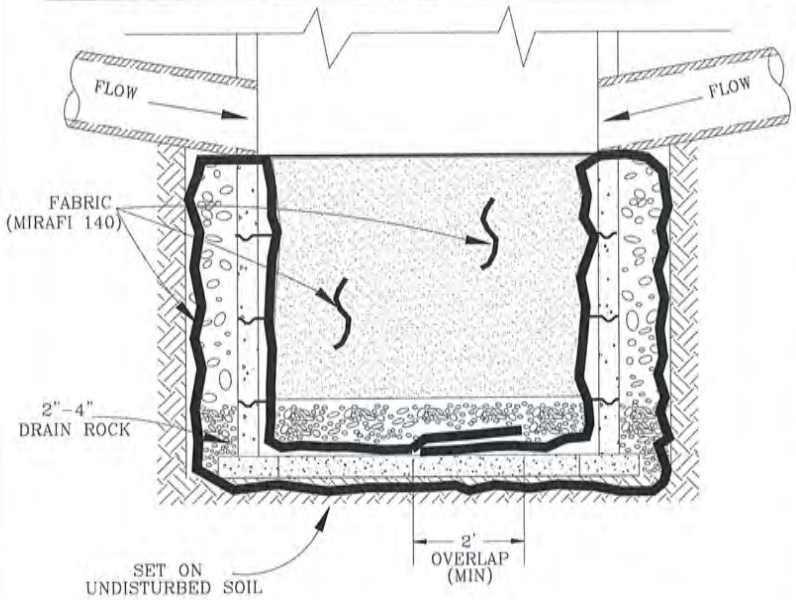


# DRYWELL LINING DETAIL

GENERAL NOTES:

1. STANDARD CONCRETE MANHOLE, FRAME, COVER, CONE, AND SECTIONS, ARE REQUIRED.
2. INFILTRATION TESTS BY A QUALIFIED SOILS ENGINEER SHALL CERTIFY SOILS SUITABILITY FOR DRYWELL INSTALLATION.
3. LINE INSIDE, BOTTOM & OUTSIDE OF PERFORATED MANHOLE SECTION AS SHOWN USE MIRAFI 140.
4. FILL TO BOTTOM OF LOWEST PERFORATED MANHOLE SECTION WITH CLEAN DRAIN ROCK.
5. CONSTRUCTION OF DRYWELLS IS NOT ALLOWED WHERE STORM SEWER MAIN EXISTS NEARBY AND LOCATION(S) FALLS OUTSIDE THE LIMITS SHOWN ON DRAWING VI-10. THE CITY WILL DETERMINE WHERE DRYWELLS MAY OR MAY NOT BE CONSTRUCTED.
6. STEPS SHALL BE COATED WITH POLYPROPALINE, AND SET IN CONCRETE RINGS @ FACTORY.
7. STEPS MUST BE INSTALLED FROM 18" BELOW THE RIM OF THE DRYWELL ELEVATION TO NO MORE THAN 12" FROM THE BOTTOM OF THE DRYWELL.

CITY OF TROUTDALE

*DRYWELL DETAIL*

| DATE: | DRAWING NO. |
|---|---|
| UPDATED 1997 | VI - 6 |

FILENAME: APWA0111.DWG

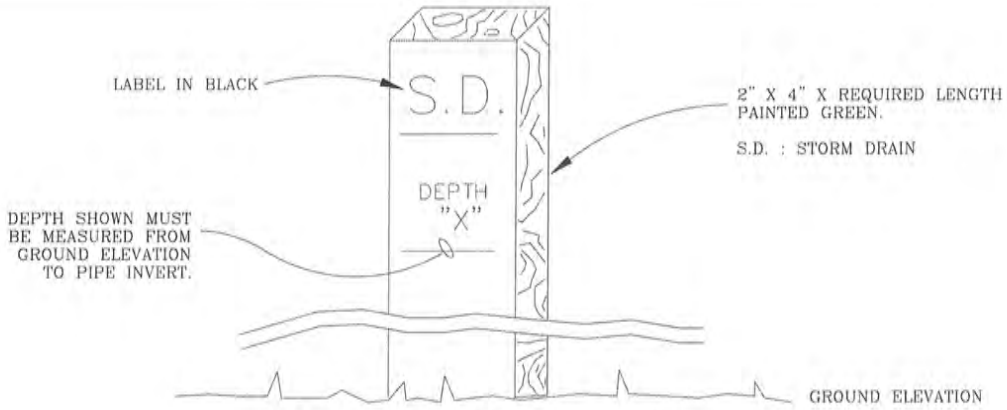


2x4 MARKER LABELS

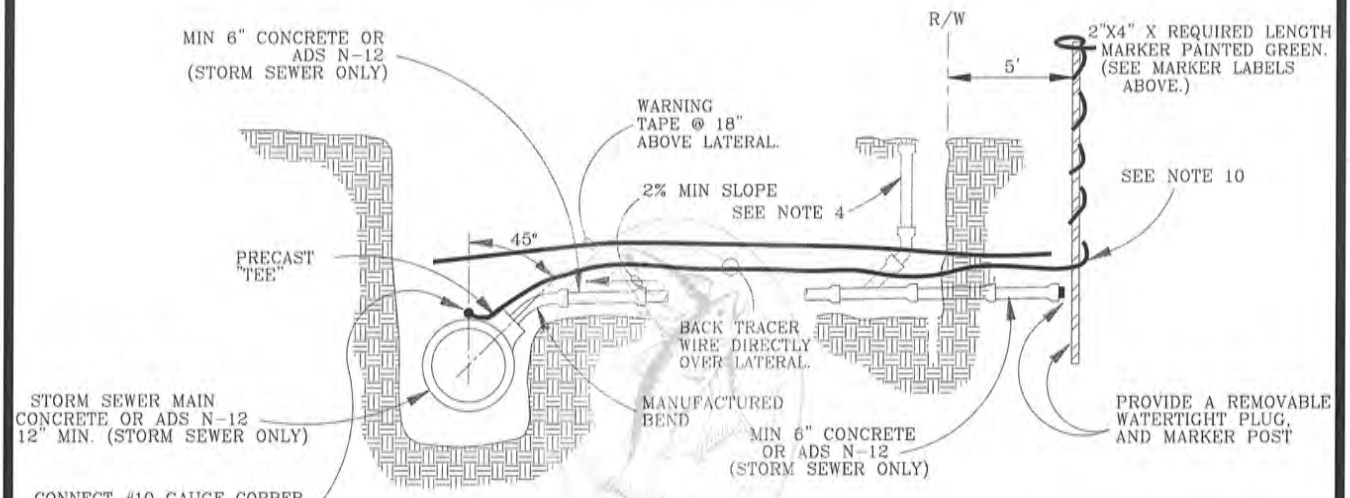


SHALLOW TRENCH STORM LATERAL.
(USED FOR DEPTHS OF 4' TO 9')

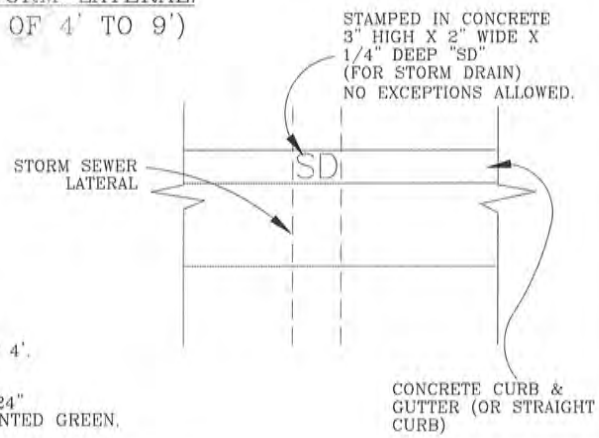


GENERAL NOTES:

1. PIPE AND FITTINGS SHALL BE COMPATIBLE.
2. MINIMUM DEPTH AT RIGHT-OF-WAY OR EASEMENT LINE SHALL BE 4'.
3. MARKER POSTS SHALL BE TREATED WOOD. POST SHALL BE 2" x 4" X REQUIRED LENGTH, FIR. POST TO EXTEND 24" MINIMUM ABOVE FINISH GRADE AND EXPOSED AREA SHALL BE PAINTED GREEN.
4. WHEN REQUIRED, A CLEANOUT SHALL BE INSTALLED @ 100' INTERVALS.
5. MARK ALL STORM LATERALS WITH A GREEN "SD" (FOR STORM DRAIN) ON FACE OF CURB WHERE LATERAL CROSSES CURB.
6. IN ADDITION TO NOTE #5 ABOVE, STAMP (IN CONCRETE) A 3" HIGH BY 2" WIDE BY 1/4" DEEP "SD" (FOR STORM DRAIN) ON TOP OF THE CONCRETE CURB FOR FUTURE LOCATES.
7. LATERAL SHALL NOT BE BACKFILLED PRIOR TO INSPECTION BY CITY FORCES.
8. VERTICAL DROPS INTO STORM MAIN ARE NOT PERMITTED.
9. FLAT "T'S" MUST BE APPROVED BY THE CITY.
10. INSTALL #10 TRACER COPPER WIRE DIRECTLY OVER LATERAL & RAP AROUND 2" X 4" MARKER AS SHOWN. TRACER TAPE MUST ALSO BE INSTALLED 18" ABOVE THE PIPE.
11. A "CONTINUITY TEST" OF THE #10 GAUGE TRACER WIRE IS REQUIRED.

CITY OF TROUTDALE

*STORM SEWER LATERAL AND MARKER*

*(SHALLOW TRENCH)*

| DATE: | DRAWING NO. |
|---|---|
| UPDATED 1997 | VI - 7 |

FILENAME: APWA0023.DWG

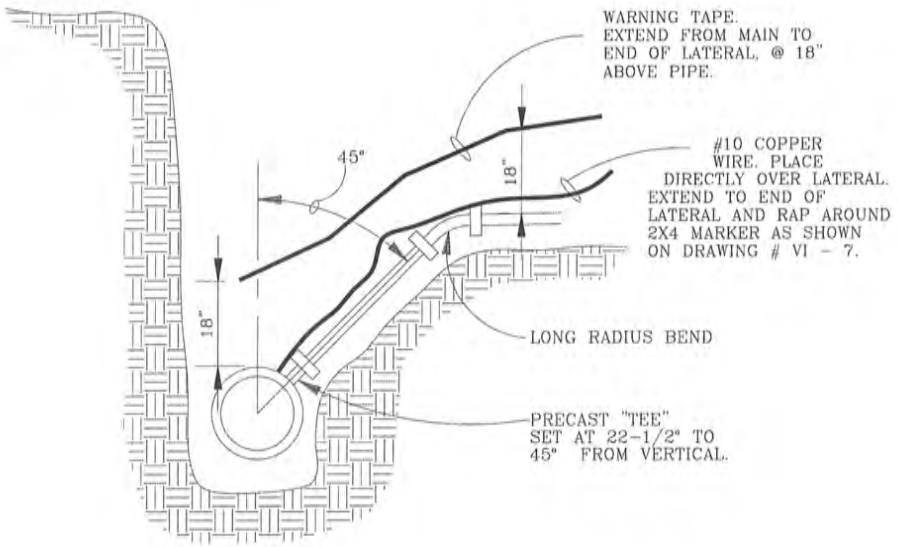


*45° TAP TO MAIN*
*(USED FOR DEPTHS OF 10' TO 14')*

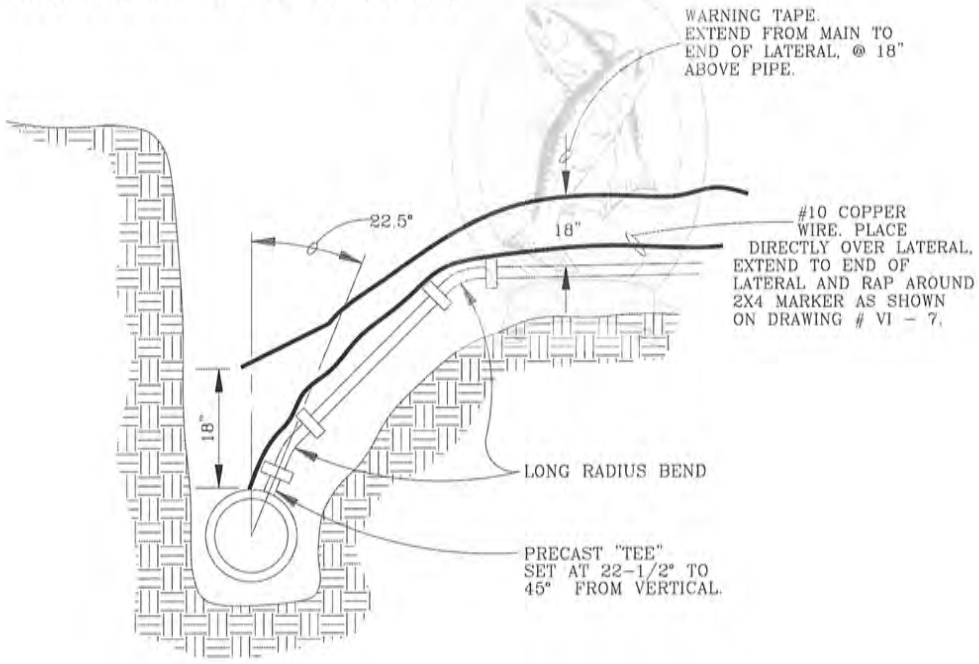


*22.5° TAP TO MAIN*
*(USED FOR EXTREME DEPTHS OF 15' OR >)*

GENERAL NOTES:

1. PIPE AND FITTINGS SHALL BE COMPATIBLE.
2. MINIMUM DEPTH AT RIGHT-OF-WAY OR EASEMENT LINE SHALL BE 4'
3. PLUGGING, AND MARKING OF UNCONNECTED SERVICES SHALL CONFORM TO DRAWING # VI - 7, STORM SEWER LATERAL AND MARKER (SHALLOW TRENCH).
4. SEE ADDITIONAL NOTES ON DRAWING VI - 7 (SHALLOW TRENCH SERVICE) FOR DETAILS ON LATERAL MARKINGS AND OTHER GENERAL REQUIRMENTS.

CITY OF TROUTDALE

# STORM SEWER LATERAL (DEEP TRENCH)

| DATE: | DRAWING NO. |
|---|---|
| UPDATED 1997 | VI - 8 |

FILENAME: APWA0024.DWG

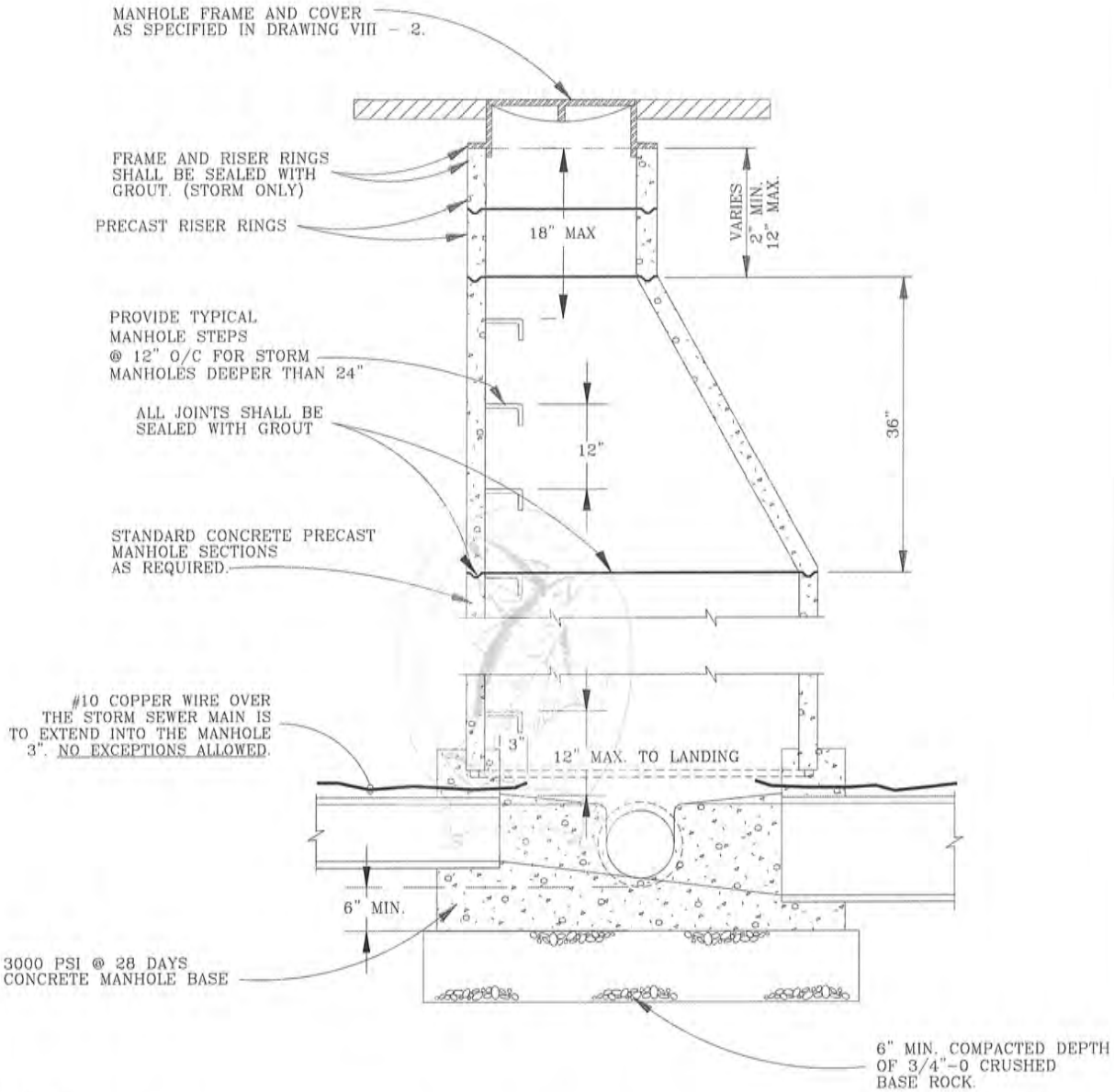


GENERAL NOTES:

1. STANDARD PRECAST CONCRETE MANHOLE SECTION DIAMETER SHALL BE 48", UNLESS OVERSIZED PIPE IS BEING USED.
2. PRECAST OR POURED IN PLACE CONCRETE MANHOLE BASES ARE ALLOWED. CHANNELS MUST BE POURED IN PLACE.
3. MANHOLES (STORM OR SANITARY) MADE OF PLASTIC AND/OR FIBER-GLASS ARE NOT ALLOWED.
4. STEPS WILL BE STEEL COATED WITH POLYPROPALINE WITH REFLECTORS.
5. PROVIDE STEPS FOR ALL MANHOLES DEEPER THAN 24".
6. TOP OF MANHOLES SHALL BE @ 18" ABOVE EXISTING GROUND IN UNPAVED SURFACES, AND PROPERLY MARKED (SEE MARKER POST DETAIL DRAWING # VIII - 8). TOP OF MANHOLE SHOULD BE FLUSH WITH TOP OF FINISH GRADE IN PAVED AREAS. IF IN GRAVEL ROAD OR SHOULDER, PLACE A 6' DIAMETER 4" THICK CONCRETE APRON AROUND MANHOLE. SLOPE APRON AWAY FROM MANHOLE @ 1/4"/FT.
7. A MINIMUM OF 0.2' DROP MUST BE PROVIDED @ ALL MANHOLES FROM INLET PIPE TO OUTLET PIPE.
8. CONSTRUCTION OF MANHOLES IN UNACCESSIBLE AREAS IS NOT ALLOWED. ALL MANHOLES MUST BE ACCESSIBLE AT ALL TIMES BY THE CITY MAINTENANCE PERSONNEL AND EQUIPMENT.

CITY OF TROUTDALE

# STORM MANHOLE (48" DIAMETER)

| DATE: | DRAWING NO. |
|---|---|
| UPDATED 1997 | VI - 9 |

FILENAME: APWA0028.DWG

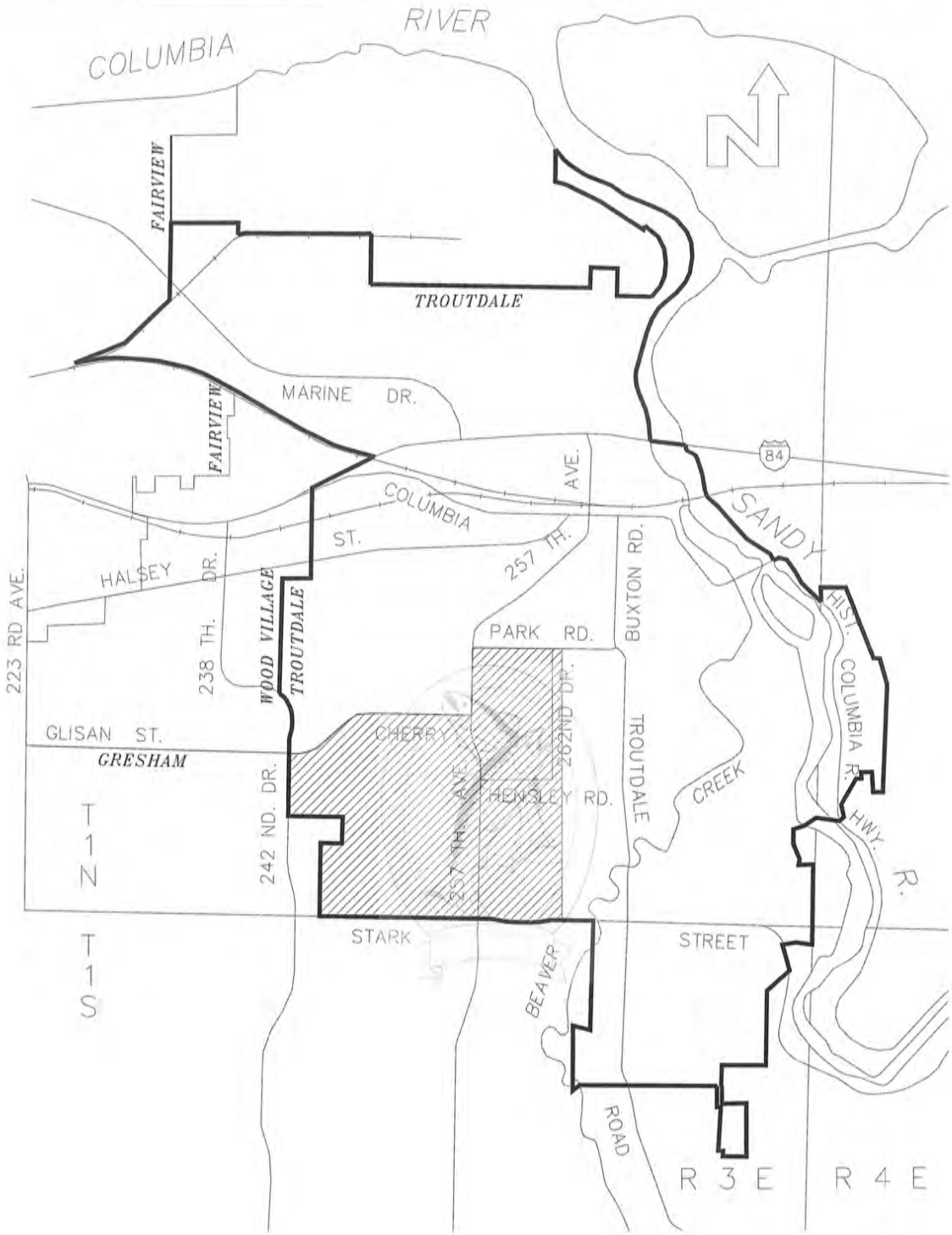


GENERAL NOTES:

DRYWELLS PERMITTED IN THIS AREA IF A GEOTECHNICAL ENGINEER, REGISTERED IN THE STATE OF OREGON, VERIFIES/CERTIFIES SUITABILITY. DRYWELLS IN OTHER AREAS NOT HATCHED ABOVE ARE NOT ALLOWED.

CITY OF TROUTDALE

# PERMITTED DRYWELL AREA

| DATE: | DRAWING NO. |
|---|---|
| JANUARY 1997 | VI-10 |

FILENAME: APWA0134

# SANITARY SEWER COLLECTION SYSTEM

**(Part VII & VIII)**

# SANITARY

## (Part VII)

## *General Requirements

# SANITARY SEWERS

**(General Requirements)**

1. **Proposed sanitary sewer mains must be in accordance with the City of Troutdale's Public Facilities Plan. Sanitary main sizes must be adequately sized to handle the flow collected from the affected development. Areas above and below the development must be considered in design, and pipes sized accordingly.**

2. **All construction/installation of sanitary sewer mains shall be done in a safe, neat and professional manner, and under supervision of City forces at all times. All safety requirements from OSHA and other state regulatory agencies must be met.**

Superseded see IC# 23

3. **All requirements of the DEQ must be met. As required by OAR 340-52-015, all construction plans of public improvements involving the construction of new sanitary lines must be sent to the DEQ for their review and approval. This will be done by the City upon submittal of accepted drawings and the required fee by the developer. DEQ approval must be sent to the City before an authorization to begin construction can be granted.**

Superseded see IC#1 Paragraph 1

4. **Manholes shall be placed at all points of change in alignment, change in pipe size, breaks in grade and at all intersections. The maximum permissible spacing is 300 feet. Sanitary sewer manholes shall not be located in backyards or any other areas which would restrict free access to manholes by maintenance personnel and vehicles.**

5. **The minimum size for public sewer mains shall be eight-inch diameter. All sanitary sewer piping shall be schedule D3034 PVC or equal. Minimum pipe diameter for private laterals is 4" and of schedule D3034 PVC or equal. All sanitary sewer laterals must be properly marked at ends as shown on Drawing VIII-9. Use of "concrete" and ADS N-12 pipe for sanitary sewer mains and laterals is not allowed.**

Superseded see IC#1 Paragraph 2

6. **All manholes shall have a minimum of 0.2 foot drop from pipe invert "in" to pipe invert "out", and all sanitary lines between manholes shall meet the minimum allowable slope requirements as required by general engineering principles and DEQ's rules and regulations.**

7. **Sewer lines shall be laid in a straight alignment and in a uniform grade between the manholes.**

8. **Sewer depth shall be adequate to serve all property(s) which may be contributory, but no shallower than 6 feet from finished street grade.**

9. **Combined storm and sanitary sewers are strictly prohibited.**

10. **Vertical drops will be required for vertical drops exceeding 24 inches. Drops should be avoided whenever possible. All inside drops must be reviewed and approved by the City prior to construction.**

11. **Connections into the existing sanitary sewer mains require issuance of a public works permit and inspection by the City prior to backfilling. A permit fee of $50.00 will be assessed for each connection/inspection.**

12. **All new sanitary sewer pipes and manholes must be thoroughly cleaned, video taped and pressure/vacuum tested as required by the DEQ and the City. All tests must be witnessed and passed by the City prior to placing into operation.**

13. **All drains from private/public swimming pools must be connected to the sanitary sewer and <u>not</u> to the storm sewer. All other privately owned facilities high in chlorine content or any other strong chemical mixture shall be connected to the sanitary sewer only. Approval from the City is required when making such connections to the sanitary main. Pretreatment regulations may apply; the City will determine this on a per-project basis.**

14. **There shall only be one sanitary sewer lateral connection per residential dwelling. Also, added discharge points in laterals for discharge or use by recreation vehicles, et cetera, is strictly prohibited.**

15. **All public sanitary sewer mains extending into, under, above, through, and beyond private property, shall be placed within a legal public utility easement granted to the City by the affected property owner prior to actual construction. Width and length of such easement will be determined by the City, and will be based on size, type, depth and length of pipe being used. All Building Code restrictions, as they apply to public utility easements, shall apply.**

16. **Public sanitary sewer lines within streets will only be installed in public rights-of-way. Any sanitary sewer line installed within private streets will be privately owned and maintained. Public responsibility for the sanitary sewer collection system stops at the sewer main and does not include laterals to individual properties.**

17. **The builder/developer must provide to the City any guarantee or warranty normally furnished with the purchase of any materials used in connection with the project at hand. In addition, they must furnish the City a written warranty providing satisfactory in-service operation of all work performed by affected contractor (including but not limited to all sanitary mains, laterals, manholes, pump stations, force mains, etc.) for a period of two (2) years following date of project acceptance.**

18. **All other construction practices (relating to sanitary sewer) within the City's public right-of-way, not covered in these "General Requirements" and/or "Construction**

**Details" sections, shall comply with the rules and regulations found in the most recent edition of the "American Public Works Association Standard Specifications".**

19. **All new improvements proposed for construction and intended for public dedication (once these facilities are constructed to City standards) must be proposed to the City in writing, by the developer and/or legal owner of the project, prior to the receipt of an authorization to begin construction from the City. This formal written request from the developer/owner to the City must be reviewed and approved by the City, and then signed by both parties to formally bind both parties to the agreement.**

# SANITARY

## (Part VIII)

## * Construction Details

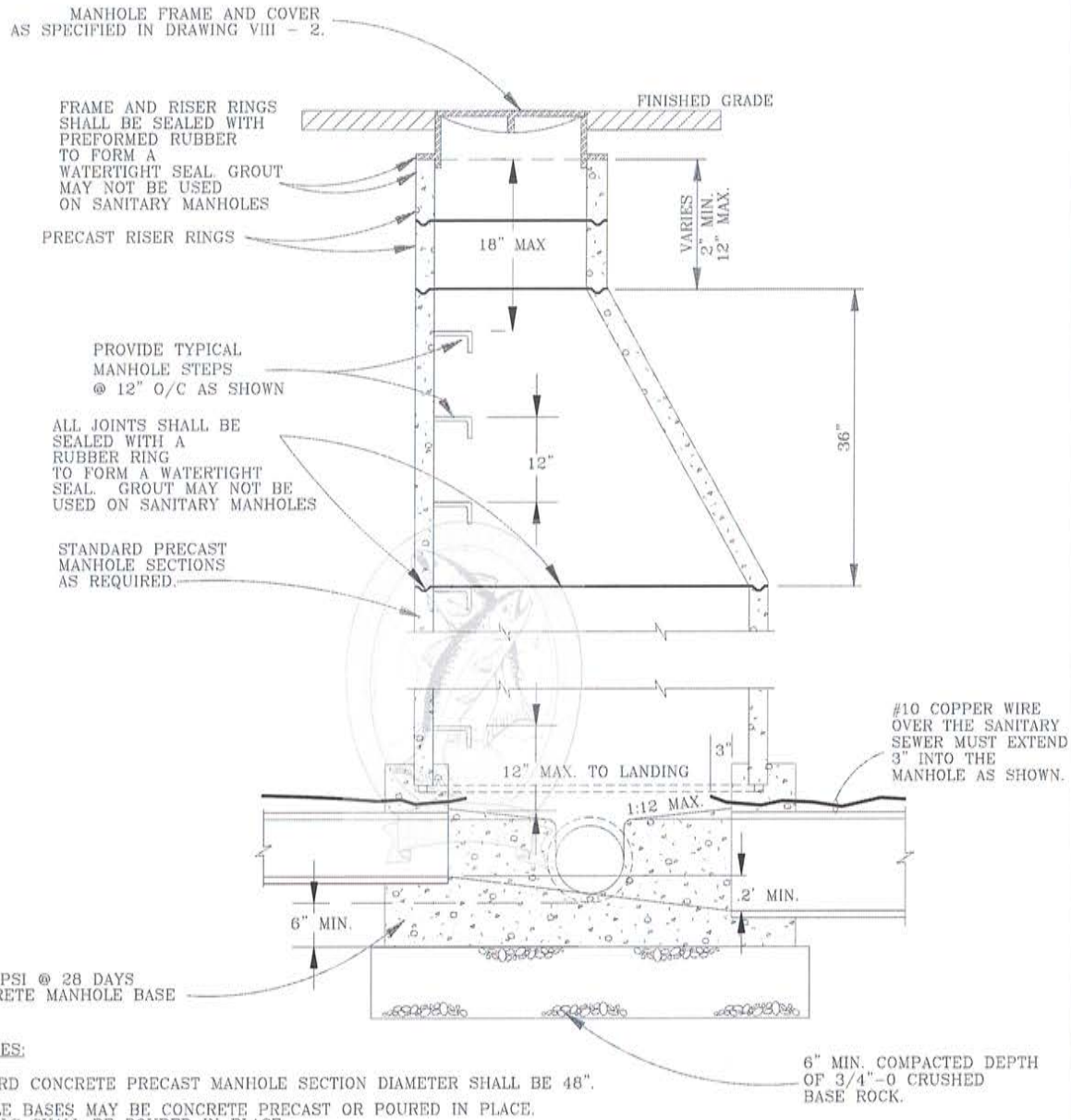


GENERAL NOTES:

1. STANDARD CONCRETE PRECAST MANHOLE SECTION DIAMETER SHALL BE 48".
2. MANHOLE BASES MAY BE CONCRETE PRECAST OR POURED IN PLACE. CHANNELS SHALL BE POURED IN PLACE.
3. MANHOLES (SANITARY OR STORM) MADE OF PLASTIC AND/OR FIBERGLASS ARE NOT ALLOWED.
4. STEPS WILL BE STEEL COATED WITH POLYPROPALINE WITH REFLECTORS.
5. PROVIDE STEPS FOR ALL MANHOLES DEEPER THAN 24".
6. TOP OF MANHOLES SHALL BE @ 18" ABOVE EXISTING GROUND IN UNPAVED SURFACES, AND PROPERLY MARKED (SEE MARKER POST DETAIL DRAWING # VIII - 8). TOP OF MANHOLE SHOULD BE FLUSH WITH TOP OF FINISH GRADE IN PAVED AREAS.
7. A MINIMUM OF 0.2' DROP MUST BE PROVIDED @ ALL MANHOLES FROM INLET PIPE TO OUTLET PIPE.
8. ALL MANHOLES SHALL BE VACUUM TESTED AND PASSED PRIOR TO ACCEPTANCE BY THE CITY.
9. MANHOLES LOCATED ON ROAD SHOULDER(S) NOT PAVED MUST BE ENCLOSED IN A 6'X6'X4" CONCRETE APRON ON 2" OF CRUSHED ROCK. SLOPE APRON AWAY FROM MANHOLE @ 1/4"/FT.
10. DO NOT CONSTRUCT SANITARY SEWER MANHOLES WITHIN THE CURB & GUTTER AREA; OR, IN ANY OTHER DIRECT DRAINAGE WAY.

CITY OF TROUTDALE

# SANITARY MANHOLE (48" DIAMETER)

| DATE: | DRAWING NO. |
|---|---|
| UPDATED 1997 | VIII - 1 |

FILENAME: APWA0125.DWG

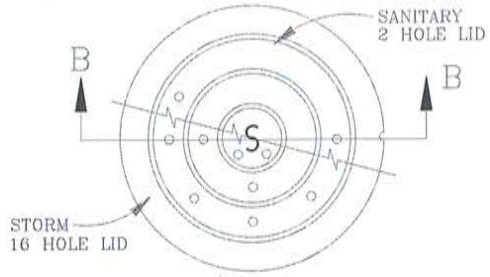


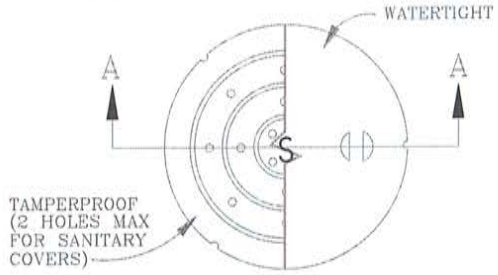


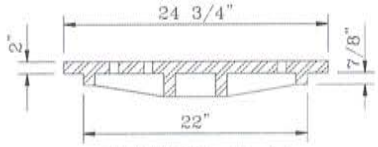


SECTION B–B

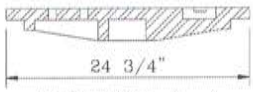


SECTION A–A

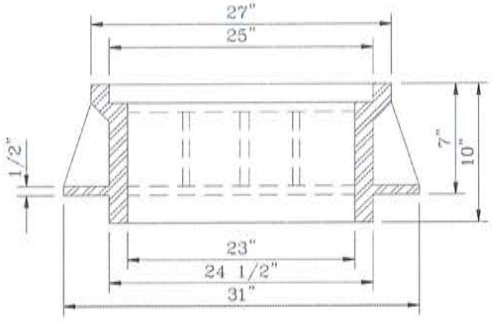


(APPROX. WT. – 387 LBS.)

CAST IRON STANDARD

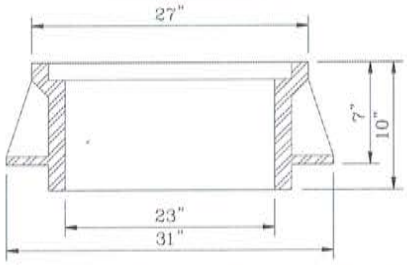


CAST IRON TAMPERPROOF & WATERTIGHT

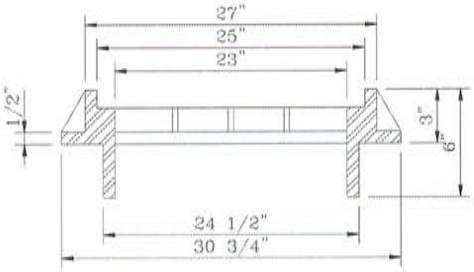


(APPROX. WT. – 305 LBS.)

CAST IRON SUBURBAN

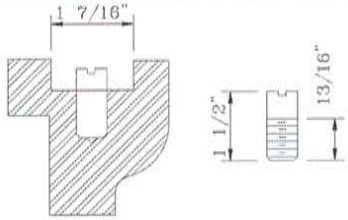


1 REQUIRED PER COVER FOR
WATERTIGHT AND TAMPERPROOF

LOCATING STUD DETAILS

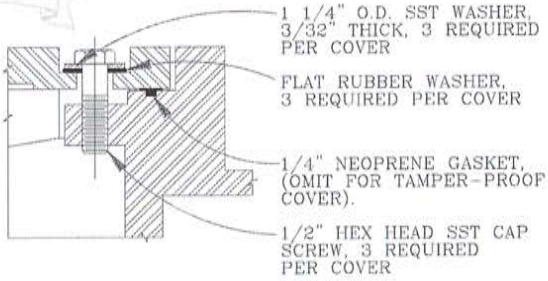


NOTE:
3 REQUIRED, 1/2" x 1 1/4" PENTAGONAL
OR HEXAGONAL HEAD, BRONZE OR CAD. PLATED.

BOLT–DOWN DETAIL
(FOR TAMPERPROOF AND WATERTIGHT)

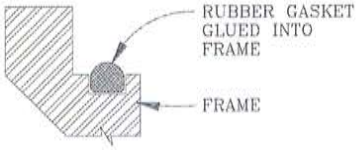


WATERTIGHT GASKET DETAIL

GENERAL NOTES:

1. TAMPERPROOF COVERS REQ'D ON SANITARY OR STORM DRAIN MANHOLE WHERE LOCATED IN PEDESTRIAN WAYS OR EASMENT AREAS. TAMPERPROOF COVERS FOR SANITARY MANHOLES SHALL HAVE 2 HOLES MAXIMUM.
2. WATERTIGHT COVERS ARE REQUIRED IF LOCATED WHERE COVER MAY BE SUBMERGED, OR IN CURB/GUTTER LINE.
3. USE CAST IRON STANDARD UNLESS OTHERWISE REQUIRED BY THE CITY.

CITY OF TROUTDALE

# MANHOLE LIDS AND FRAMES (SANITARY AND STORM)

| DATE: | DRAWING NO. |
|---|---|
| UPDATED 1997 | VIII – 2 |

FILENAME: APWA0027.DWG

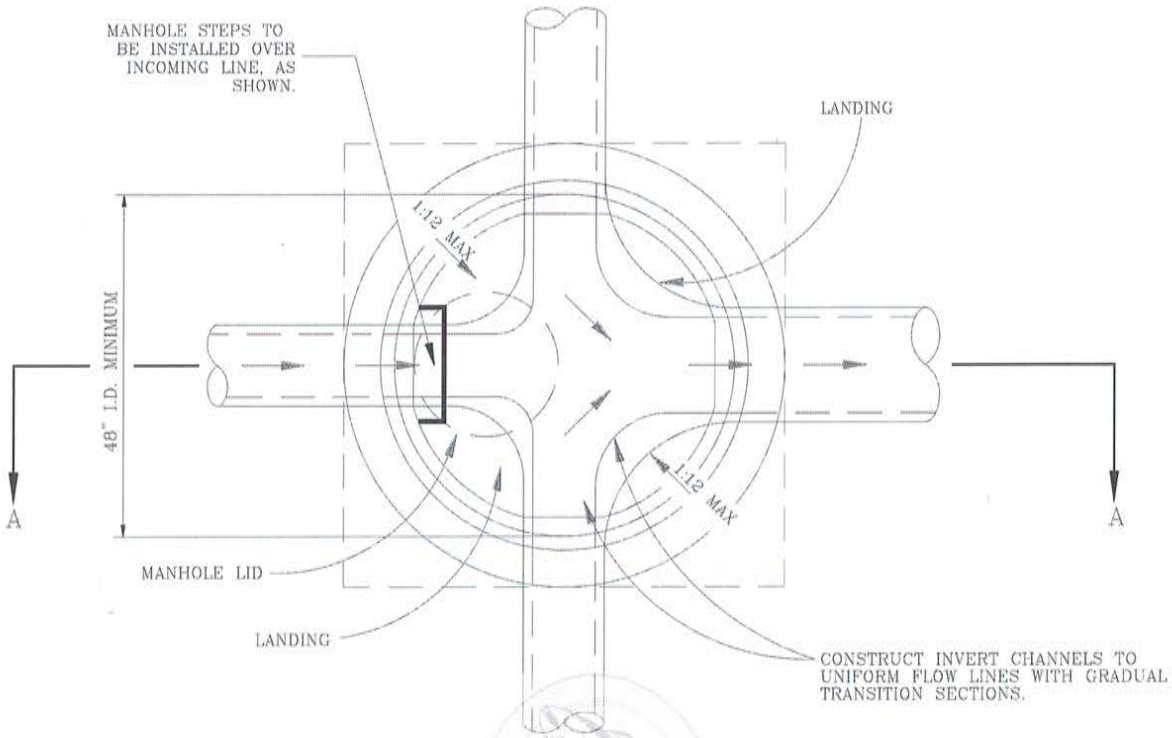


PLAN VIEW

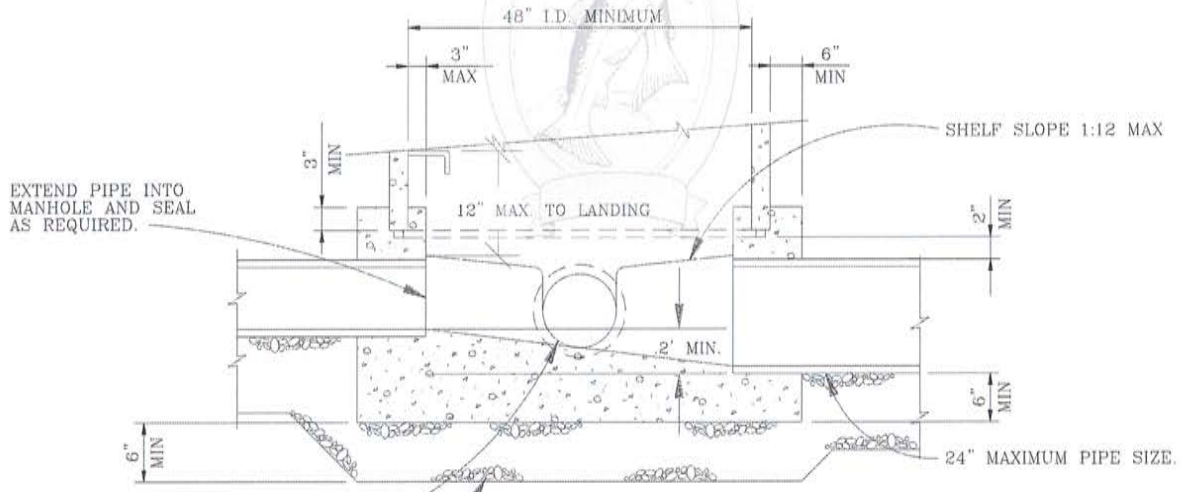


SECTION A-A

Superseded by IC#18 2/28/2008

GENERAL NOTES:

1. CHANNELS SHALL BE CONSTRUCTED TO PROVIDE SMOOTH SLOPES AND RADII TO OUTLET PIPE. AND, ALL CHANNEL INTERSECTIONS IN MANHOLES SHALL BE FORMED IN A MANNER THAT PROMOTES UNRESTRICTED FLOW OF SEWAGE FROM ALL CHANNELS, AND WITH NO SWIRLING/OR BACKUP OF WASTE WATER IN ANY CHANNEL.
2. BASES MAY BE POURED IN PLACE OR PRECAST. USE 3000 PSI CONCRETE @ 28 DAYS FOR BASE IF POURED IN PLACE.
3. ALLOW A MINIMUM OF 24 HOURS TO ELAPSE BEFORE PLACING REMAINING RINGS AND CONE.
4. THIS MANHOLE BASE SECTION SHALL BE USED FOR PIPE SIZES UP TO 24" ONLY. A LARGER SIZE BASE IS REQUIRED IF LARGER PIPE SIZE IS NECESSARY.
5. A MINIMUM OF 0.2' DROP IS REQUIRED FROM INLET PIPE TO OUTLET PIPE.

CITY OF TROUTDALE

48" MANHOLE BASE (SANITARY OR STORM)

| DATE: | DRAWING NO. |
|---|---|
| UPDATED 1997 | VIII - 3 |

FILENAME: APWA0029.DWG

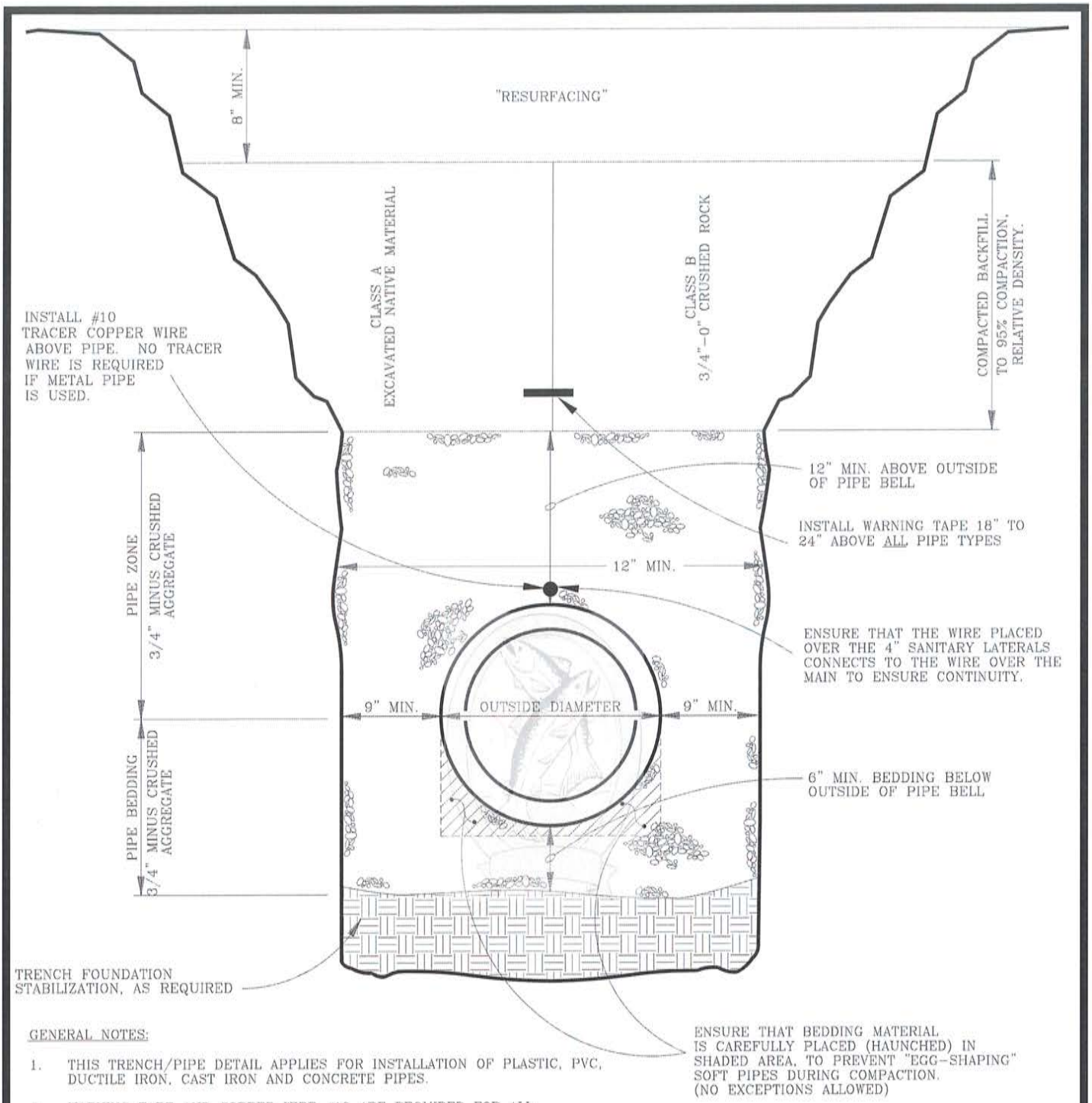


ENSURE THAT BEDDING MATERIAL
IS CAREFULLY PLACED (HAUNCHED) IN
SHADED AREA, TO PREVENT "EGG-SHAPING"
SOFT PIPES DURING COMPACTION.
(NO EXCEPTIONS ALLOWED)

GENERAL NOTES:

1. THIS TRENCH/PIPE DETAIL APPLIES FOR INSTALLATION OF PLASTIC, PVC, DUCTILE IRON, CAST IRON AND CONCRETE PIPES.

2. WARNING TAPE AND COPPER WIRE #10 ARE REQUIRED FOR ALL PLASTIC, PVC, AND CONCRETE PIPES. COPPER WIRE IS NOT REQUIRED OVER DUCTILE OR CAST IRON PIPES; HOWEVER, TRACER TAPE IS, AS SHOWN ABOVE.

3. ALL PLASTIC OR PVC PIPES WILL BE TESTED FOR "ROUNDNESS" AFTER COMPACTION BY RUNNING A MANDRELL (OR OTHER METHOD AS REQUIRED BY THE CITY) THROUGH ALL PIPES.

4. ALL PIPES SHALL BE CHLORINATED, PRESSURE TESTED, FLUSHED AND OTHERWISE TESTED AS REQUIRED BY THE CITY. METHODS REQUIRED TO TEST PIPES WILL DEPEND ON INTENDED USE OF PIPE. ALL TESTS MUST BE WITNESSED BY CITY FORCES. METHODS FOR TESTING AND ACCEPTABLE RESULTS USED WILL BE AS SPECIFIED IN THE LATEST EDITION OF THE APWA STANDARD SPECIFICATIONS.

5. TYPE OF BACKFILL USED WILL BE DETERMINED BY THE CITY

6. BEDDING GREATER THAN 6" IN DEPTH MAY BE REQUIRED BY THE CITY, IF NATIVE MATERIAL IS NOT SUITABLE.

7. ALL CURRENT SAFETY REQUIREMENTS OR REGULATIONS (AS SET FORTH BY OSHA AND OTHER STATE REGULATORY AGENCIES) MUST BE ADHERED TO DURING TRENCH EXCAVATION.

8. WHEN DIGGING TRENCH IN TRAFFIC ZONES, A TRAFFIC PLAN MUST BE APPROVED BY THE CITY OF TROUTDALE OR AFFECTED JURISDICITON.

9. AN "ELECTRICAL CONTINUITY" TEST OF ALL TRACER WIRE OVER MAINS/LATERALS IS REQUIRED UPON COMPLETION.

CITY OF TROUTDALE

# TRENCH BACKFILL BEDDING AND PIPE ZONE

| DATE: | DRAWING NO. |
|---|---|
| UPDATED 1997 | VIII - 4 |

FILENAME: APWA0015.DWG

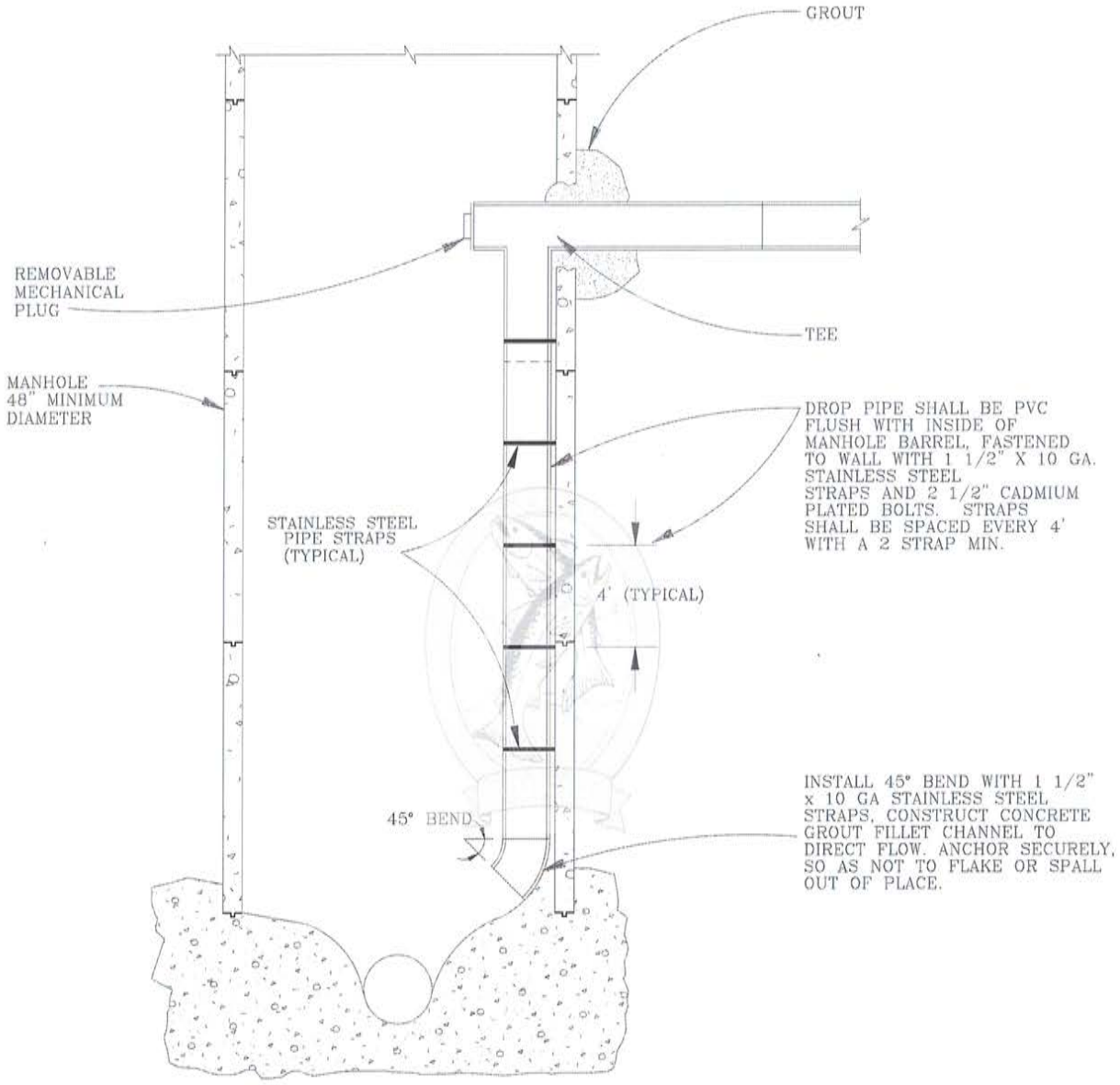


GENERAL NOTES:

1. ONLY ONE INSIDE DROP CONNECTION WILL BE ALLOWED PER MANHOLE.
2. DROP MANHOLE CONFIGURATION (AS SHOWN) IS REQUIRED IF PIPE IS 25" OR HIGHER FROM LANDING (AT BOTTOM OF MANHOLE) TO PIPE INVERT.
3. APPROVAL IS REQUIRED BY CITY FOR "ALL" DROP CONNECTIONS.
4. CITY MAY REQUIRE THAT AN "OUTSIDE DROP CONNECTION" BE PROVIDED–SEE DRAWING # VIII – 6.

CITY OF TROUTDALE

# INSIDE DROP CONNECTION FOR MANHOLES (SANITARY OR STORM)

| DATE: | DRAWING NO. |
|---|---|
| UPDATED 1997 | VIII – 5 |

FILENAME: APWA0030.DWG

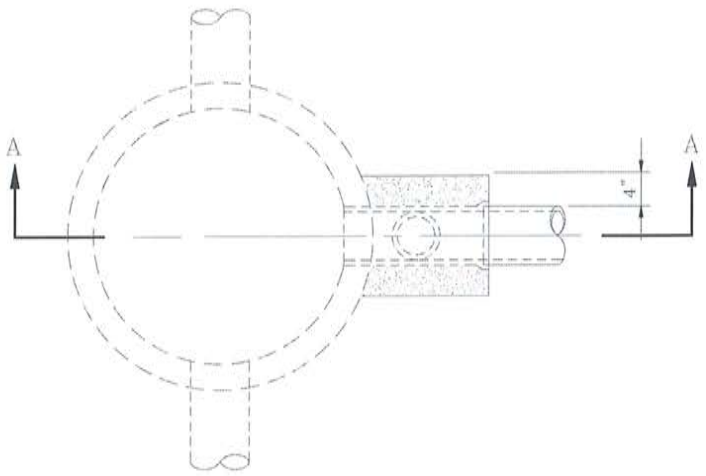


PLAN VIEW

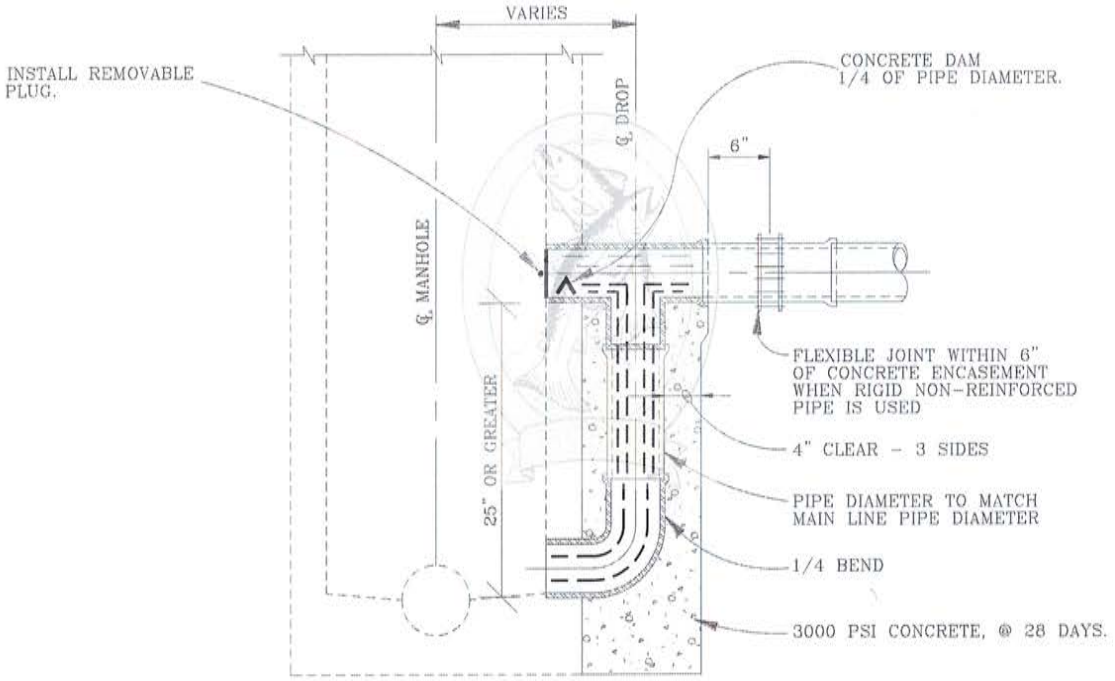


SECTION A-A

GENERAL NOTES:

1. DROP MANHOLE CONFIGURATION (AS SHOWN) IS REQUIRED IF PIPE IS HIGHER THAN 25" FROM LANDING (@ BOTTOM OF MANHOLE) TO PIPE INVERT.
2. APPROVAL IS REQUIRED BY CITY FOR ALL DROP CONNECTIONS.
3. CITY MAY REQUIRE THAT AN "INSIDE DROP CONNECTION" BE PROVIDED. SEE DRAWING # VIII - 5.

CITY OF TROUTDALE

# OUTSIDE DROP CONNECTION FOR MANHOLES (SANITARY OR STORM)

| DATE: | DRAWING NO. |
|---|---|
| UPDATED 1997 | VIII - 6 |

FILENAME: APWA0031.DWG

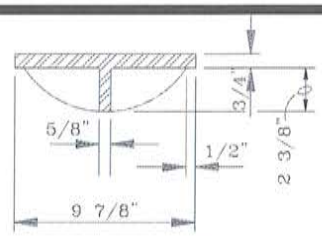


CAST IRON COVER

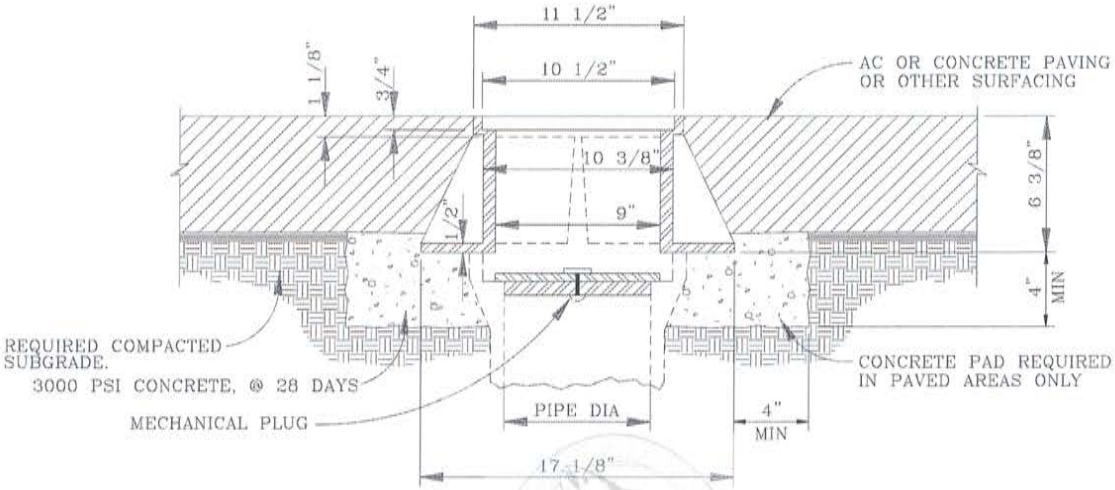


CAST IRON FRAME

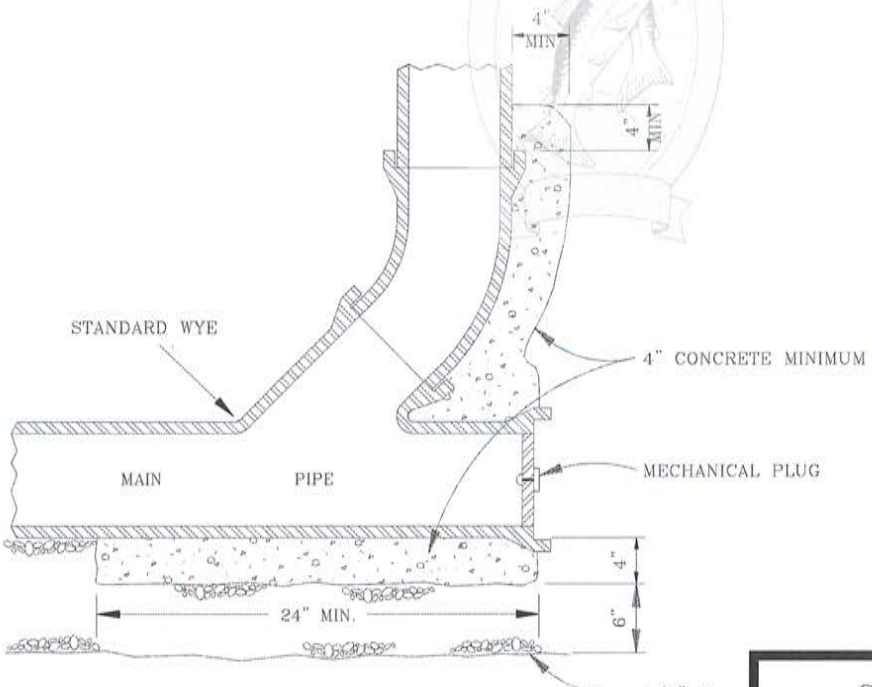


CLEANOUT

GENERAL NOTES:

1. IF LOCATED IN GRAVELED AREAS, PLACE A 4" THICK, 4' DIAMETER CONCRETE APRON AROUND CLEANOUT. SLOPE CONCRETE APRON AWAY FROM CLEANOUT @ 1"/FT.
2. MARK AS SHOWN ON DRAWING # VIII - 8. IF APPLICABLE.
3. ALL CLEANOUT MATERIAL SHALL BE SAME AS MAIN PIPE.

CITY OF TROUTDALE

*CLEANOUT*

| DATE: | DRAWING NO. |
|---|---|
| UPDATED 1997 | VIII - 7 |

FILENAME: APWA0052.DWG

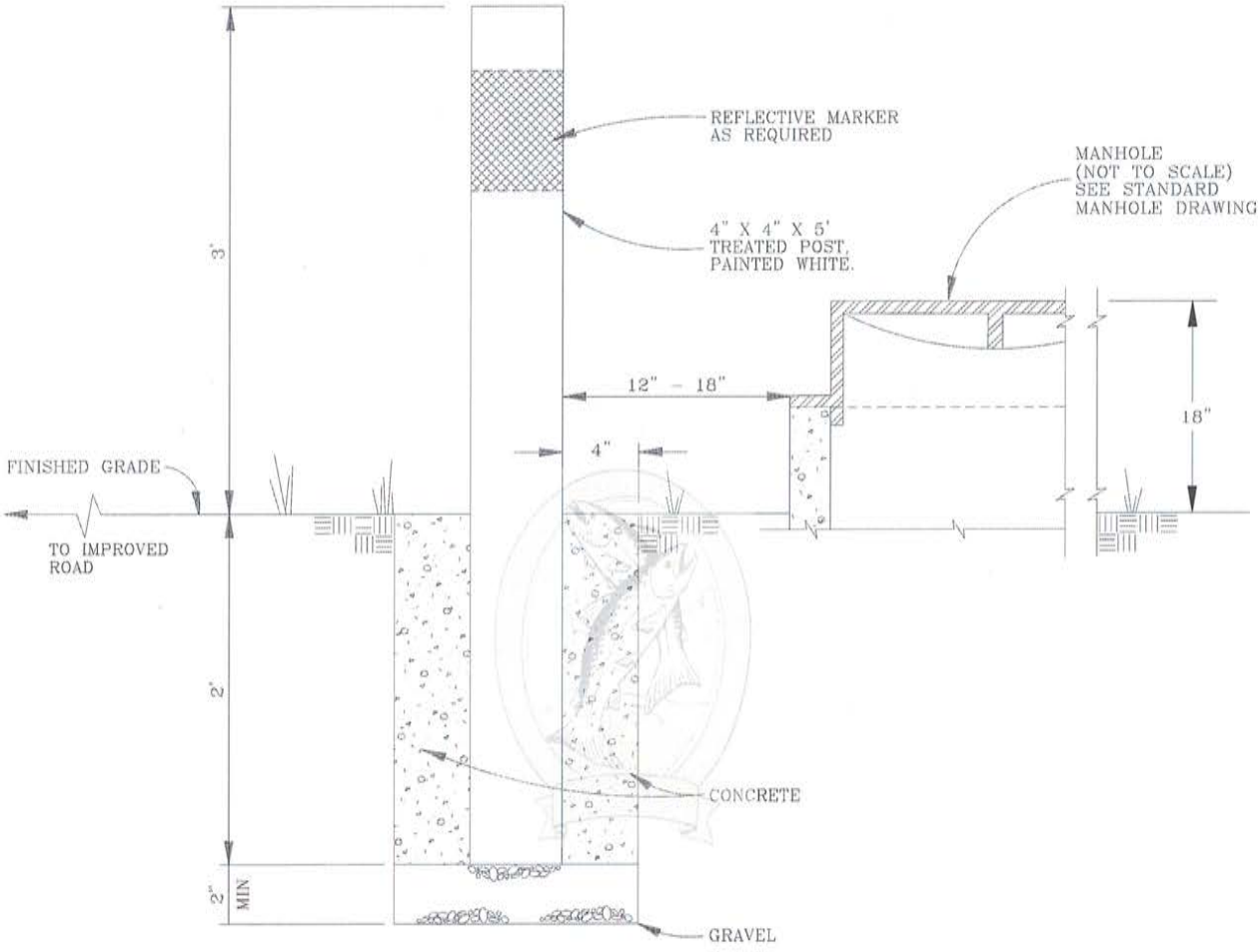


MARKER POST AT MANHOLE OR CLEANOUT

GENERAL NOTES:

1. "ALL" MARKER POSTS SHALL BE SET IN CONCRETE, AS SHOWN.
2. POSTS SHALL BE PAINTED WHITE.
3. REQUIRED FOR "ALL" MANHOLES AND CLEANOUTS LOCATED IN OFF-SITE AREAS. EXCLUDES SHOULDERS OF ROADS, OR OTHER UNIQUE LOCATIONS AS DETERMINED BY THE CITY.
4. INSTALL MARKER AS SHOWN, BETWEEN ROAD AND MANHOLE OR CLEANOUT.

CITY OF TROUTDALE

*SANITARY & STORM, MANHOLES AND CLEANOUTS MARKER POST*

| DATE: | DRAWING NO. |
|---|---|
| UPDATED 1997 | VIII - 8 |

FILENAME: APWA0025.DWG

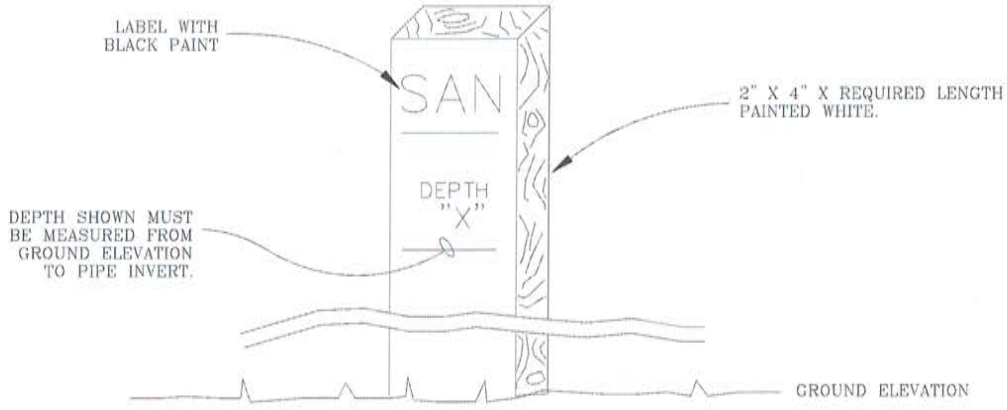


2x4 MARKER LABELS

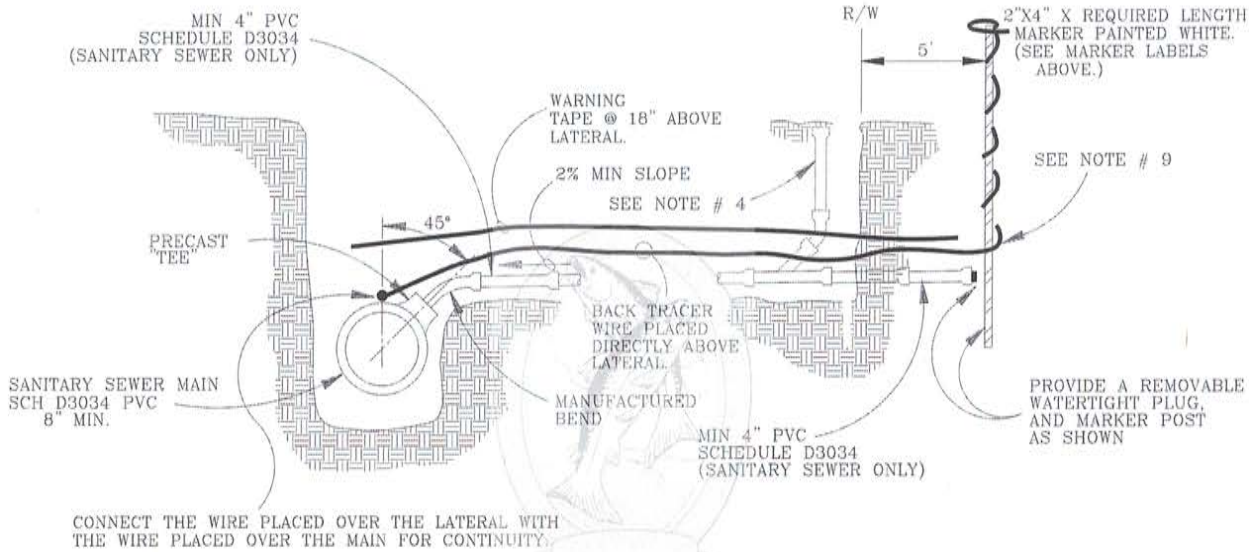


SHALLOW TRENCH SANITARY LATERAL
(USED FOR DEPTHS OF 4' TO 9')

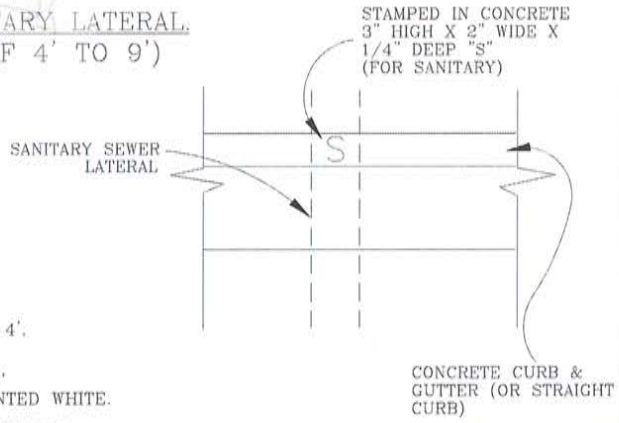


GENERAL NOTES:

1. PIPE AND FITTINGS SHALL BE COMPATIBLE. ONLY MANUFACTURED FITTINGS SHALL BE USED.
2. MINIMUM DEPTH AT RIGHT-OF-WAY OR EASEMENT LINE SHALL BE 4'.
3. MARKER POSTS SHALL BE TREATED WOOD. POST SHALL BE 2" x 4" X REQUIRED LENGTH, FIR. POST TO EXTEND 5' MINIMUM ABOVE FINISH GRADE AND EXPOSED AREA SHALL BE PAINTED WHITE.
4. WHEN REQUIRED, A CLEANOUT SHALL BE INSTALLED @ 100' INTERVALS.
5. MARK ALL SANITARY LATERALS WITH A GREEN "S" (FOR SANITARY) ON FACE OF CURB WHERE LATERAL CROSSES CURB.
6. IN ADDITION TO NOTE #5 ABOVE, STAMP (IN THE CONCRETE) A 3" HIGH BY 2" WIDE BY 1/4" DEEP "S" (FOR SANITARY) ON TOP OF THE CURB WHERE THE LATERAL CROSSES THE CURB.
7. LATERALS SHALL NOT BE BACKFILLED PRIOR TO INSPECTION BY THE CITY.
8. VERTICAL DROP INTO SANITARY MAIN IS NOT PERMITTED.
9. FLAT "T'S" MUST BE APPROVED BY THE CITY.
10. INSTALL #10 TRACER COPPER WIRE DIRECTLY OVER LATERAL & RAP AROUND 2" X 4" MARKER AS SHOWN. TRACER TAPE MUST ALSO BE INSTALLED 18" ABOVE THE PIPE.
11. AN "ELECTRICAL CONTINUITY" TEST WILL BE REQUIRED UPON COMPLETION AND BEFORE FINAL ACCEPTANCE.

CITY OF TROUTDALE

SANITARY SEWER LATERAL AND MARKER (SHALLOW TRENCH)

| DATE: | DRAWING NO. |
|---|---|
| UPDATED 1997 | VIII - 9 |

FILENAME: APWA0126.DWG

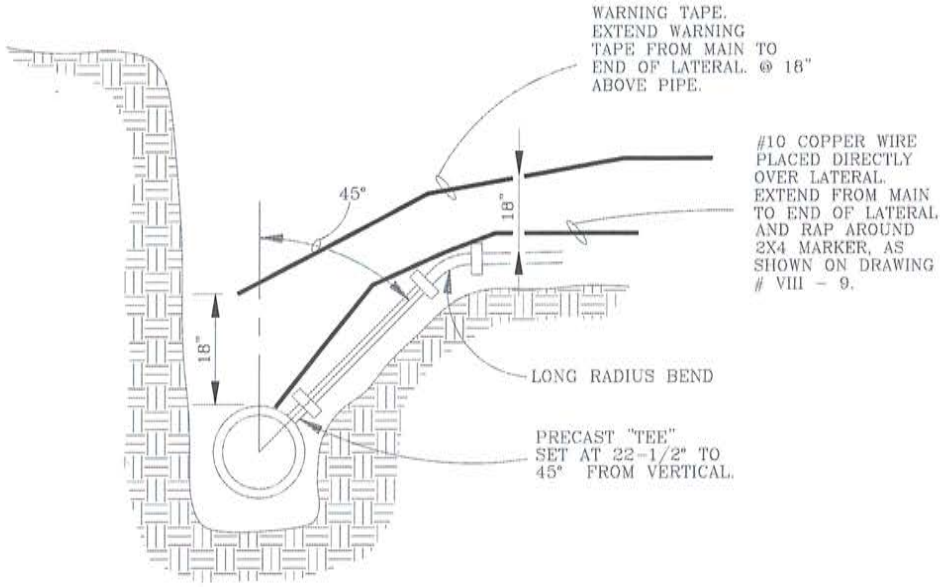


45° TAP TO MAIN
(USED FOR DEPTHS OF 10' TO 14')

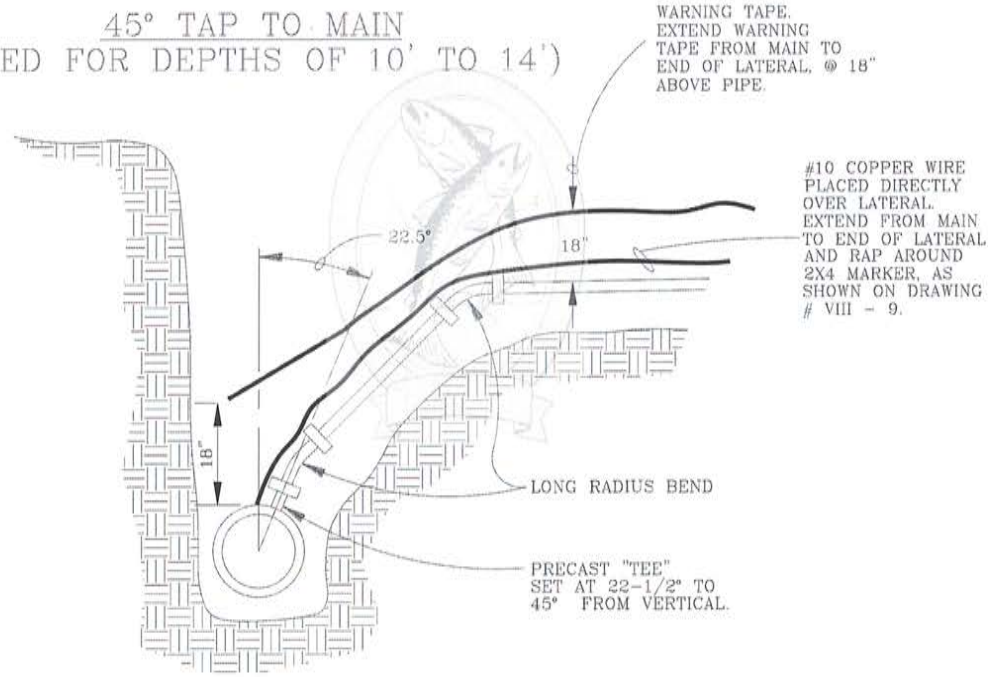


22.5° TAP TO MAIN
(USED FOR EXTREME DEPTHS OF 15' OR > )

GENERAL NOTES:

1. PIPE AND FITTINGS SHALL BE COMPATIBLE.
2. MINIMUM DEPTH AT RIGHT-OF-WAY OR EASEMENT LINE SHALL BE 4'.
3. PLUGGING, AND MARKING OF UNCONNECTED SERVICES SHALL CONFORM TO DRAWING # VIII - 9, SANITARY SEWER LATERAL AND MARKER (SHALLOW TRENCH)
4. SEE ADDITIONAL NOTES ON DRAWING # VIII - 9 (SHALLOW TRENCH SERVICE) FOR DETAILS ON MARKER AND OTHER GENERAL REQUIREMENTS.

CITY OF TROUTDALE

*SANITARY SEWER LATERAL (DEEP TRENCH)*

| DATE: | DRAWING NO. |
|---|---|
| UPDATED 1997 | VIII - 10 |

FILENAME: APWA0127.DWG

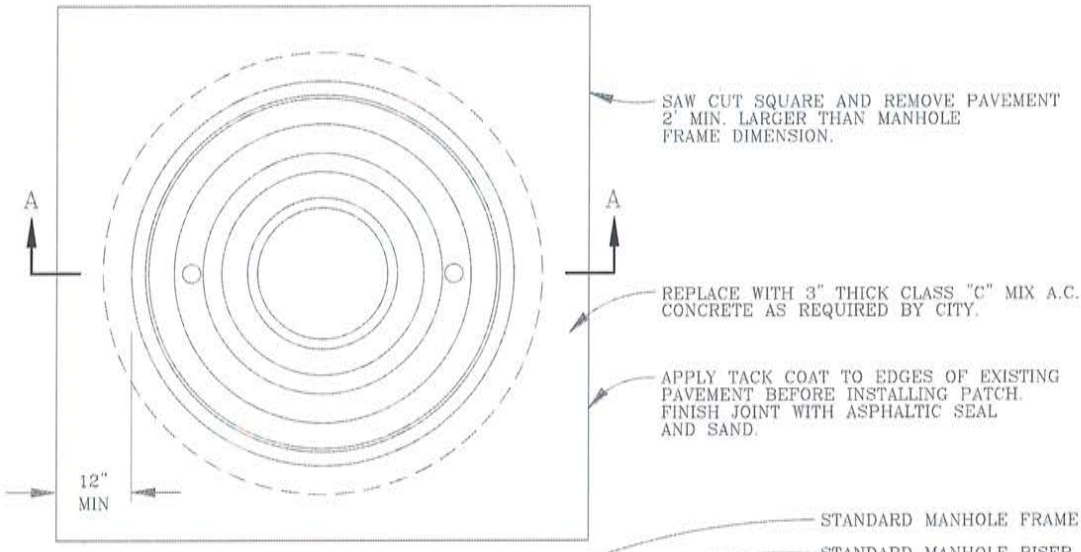


PLAN VIEW

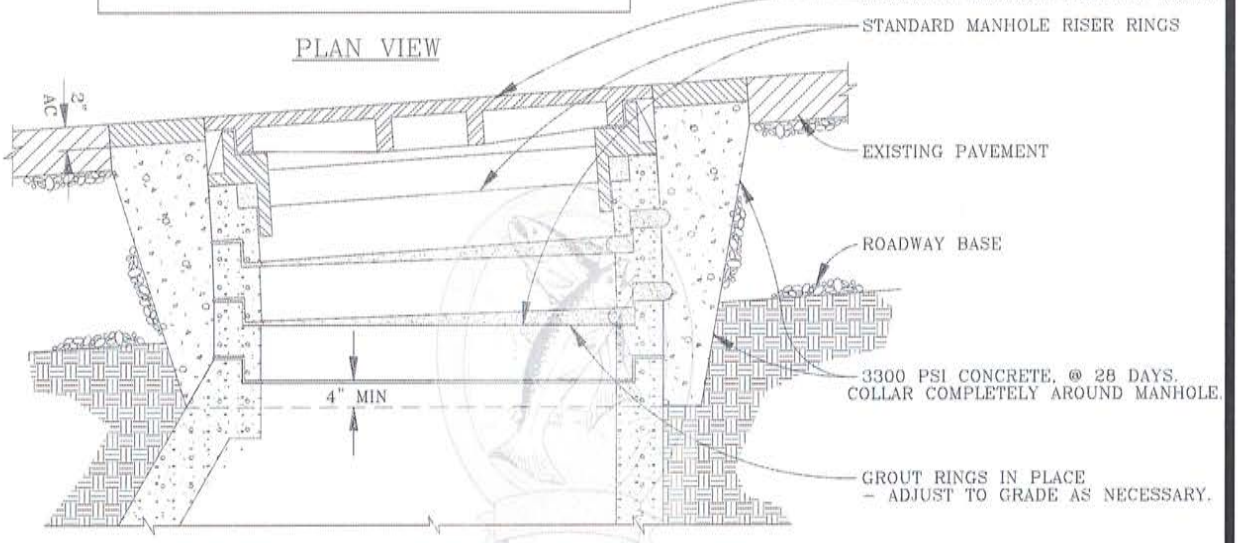


SECTION A–A

TYPICAL MANHOLE GRADE ADJUSTMENT IN STREET

GENERAL NOTES:

1. 2 HOLE LIDS FOR SANITARY.
2. 16 HOLE LIDS FOR STORM.
3. TOTAL DEPTH OF RINGS SHALL NOT EXCEED 10".

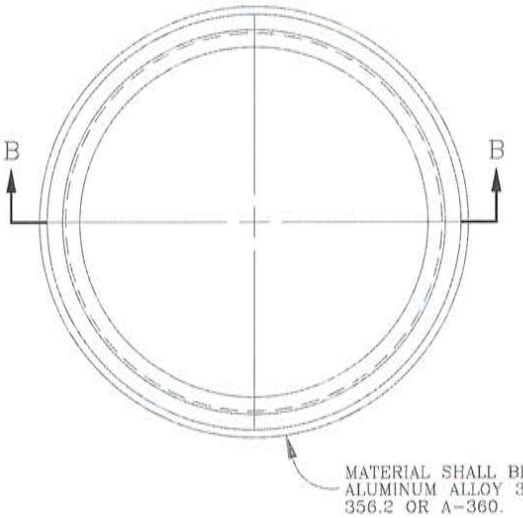


MANHOLE ADJUSTMENT RINGS FOR RESURFACING

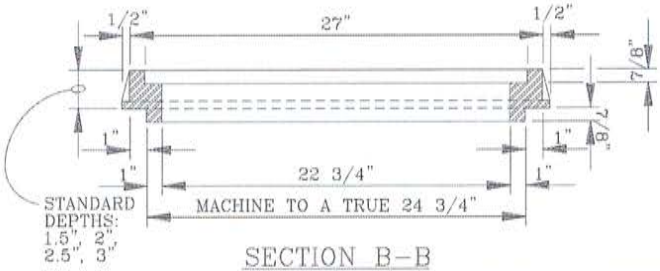


SECTION B–B

CITY OF TROUTDALE

*MANHOLE RING ADJUSTMENTS (SANITARY & STORM)*

| DATE: | DRAWING NO. |
|---|---|
| UPDATED 1997 | VIII – 11 |

FILENAME: APWA0026.DWG

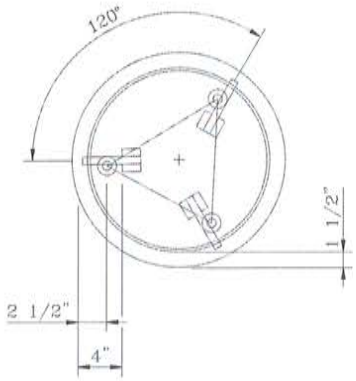


GENERAL:
BOLTS TO BE FURNISHED WITH STANDARD HEX-HEAD NUTS & COTTER KEYS. COVER AND RING TO BE MACHINED TO A TRUE BEARING AT CONTACT POINTS.

PLAN VIEW

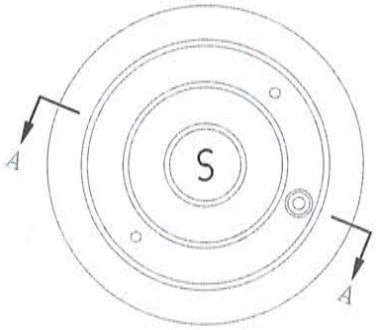


PLAN VIEW

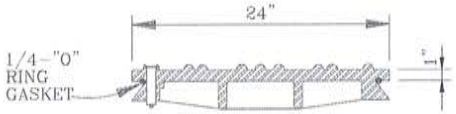


COVER SECTION

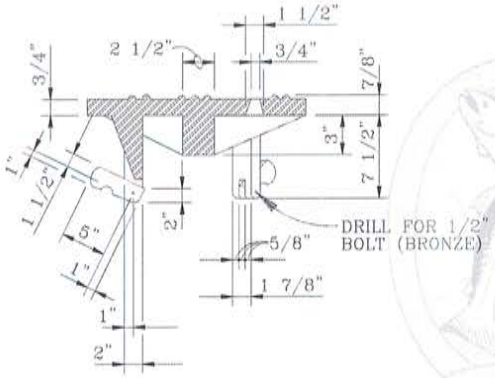


COVER SECTION

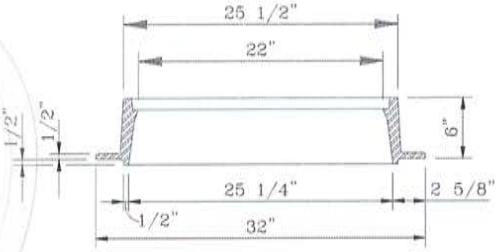


SECTION A-A

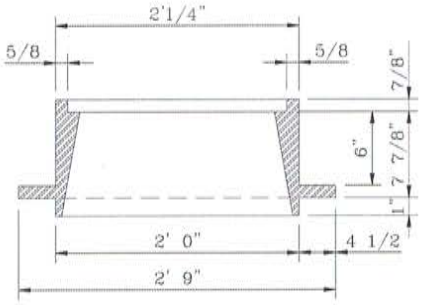


FRAME SECTION

STANDARD CAM-LOCK CAST IRON FRAME AND COVER

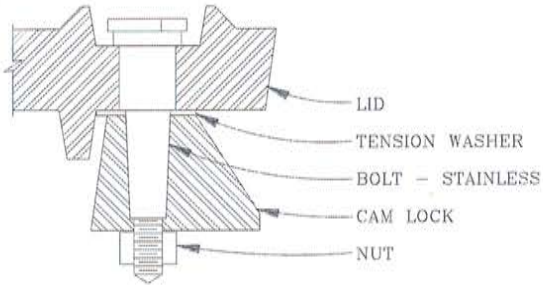


CAM-LOCK ASSEMBLY

STANDARD CAM-LOCK ALUMINUM FRAME AND COVER
(SANITARY AND STORM)

GENERAL NOTES:

1. CITY WILL DETERMINE WHEN THESE LIDS WILL BE REQUIRED, ON A "PER PROJECT" BASIS.

CITY OF TROUTDALE

*CAM-LOCK MANHOLE COVER AND FRAME DETAILS (CAST IRON AND ALUMINUM)*

| DATE: | DRAWING NO. |
|---|---|
| UPDATED 1997 | VIII - 12 |

FILENAME: APWA0053.DWG

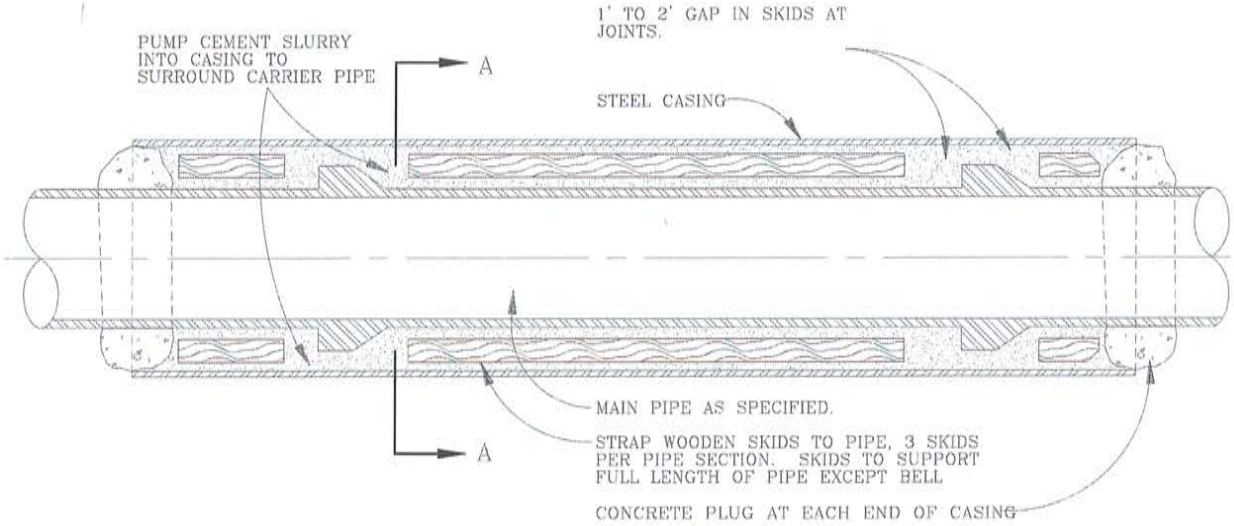


PLAN

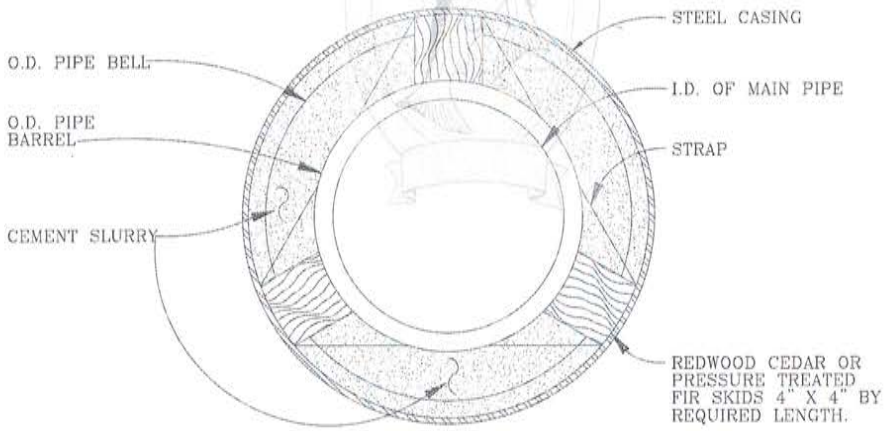


SECTION A–A

GENERAL NOTES:

1. PLUG ENDS OF CASING WITH CONCRETE, AS SHOWN.
2. A LOCATE REQUEST FOR ALL PUBLIC AND PRIVATE UTILITIES IS REQUIRED PRIOR TO BORE.
3. ALL INSTALLATIONS MUST BE WITNESSED BY CITY FORCES.

CITY OF TROUTDALE

*BORE CASING DETAIL*

| DATE: | DRAWING NO. |
|---|---|
| UPDATED 1997 | VIII – 13 |

FILENAME: APWA0022.DWG

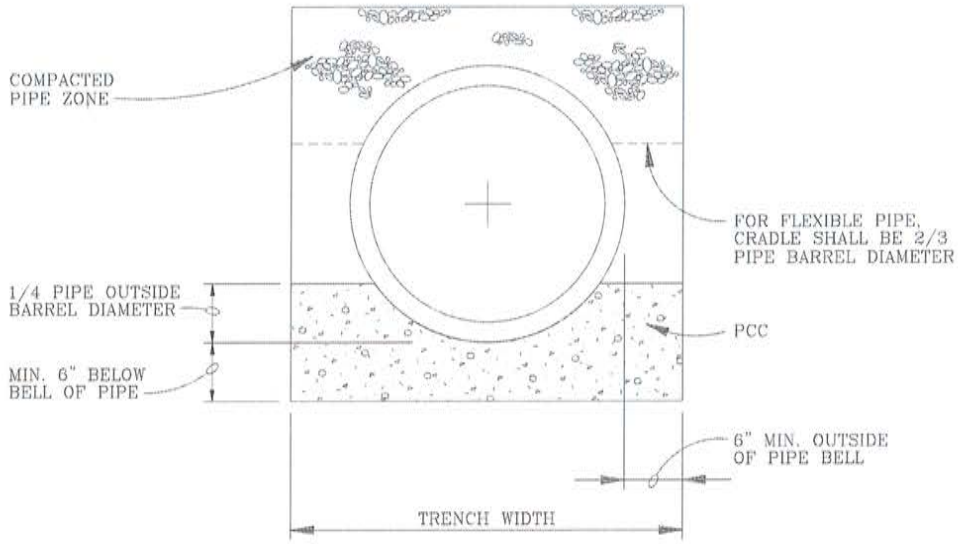


ENCASEMENT DETAIL

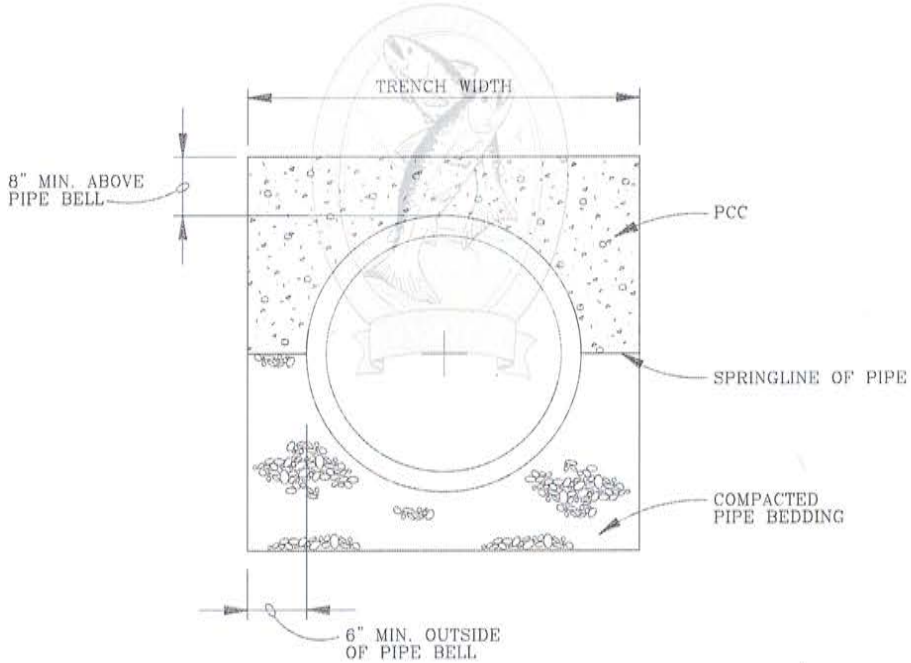


CAP DETAIL

GENERAL NOTES:

1. CONCRETE SHALL BE 3000 PSI, @ 28 DAYS.
2. CITY TO DETERMINE WHEN REQUIRED, ON A "PER PROJECT" BASIS.
3. APPLIES TO SANITARY, STORM AND WATER MAINS.

| | |
|---|---|
| CITY OF TROUTDALE | |
| *CONCRETE CRADLE AND CAP DETAILS* | |
| DATE: UPDATED 1997 | DRAWING NO. VIII – 14 |

FILENAME: APWA0016.DWG

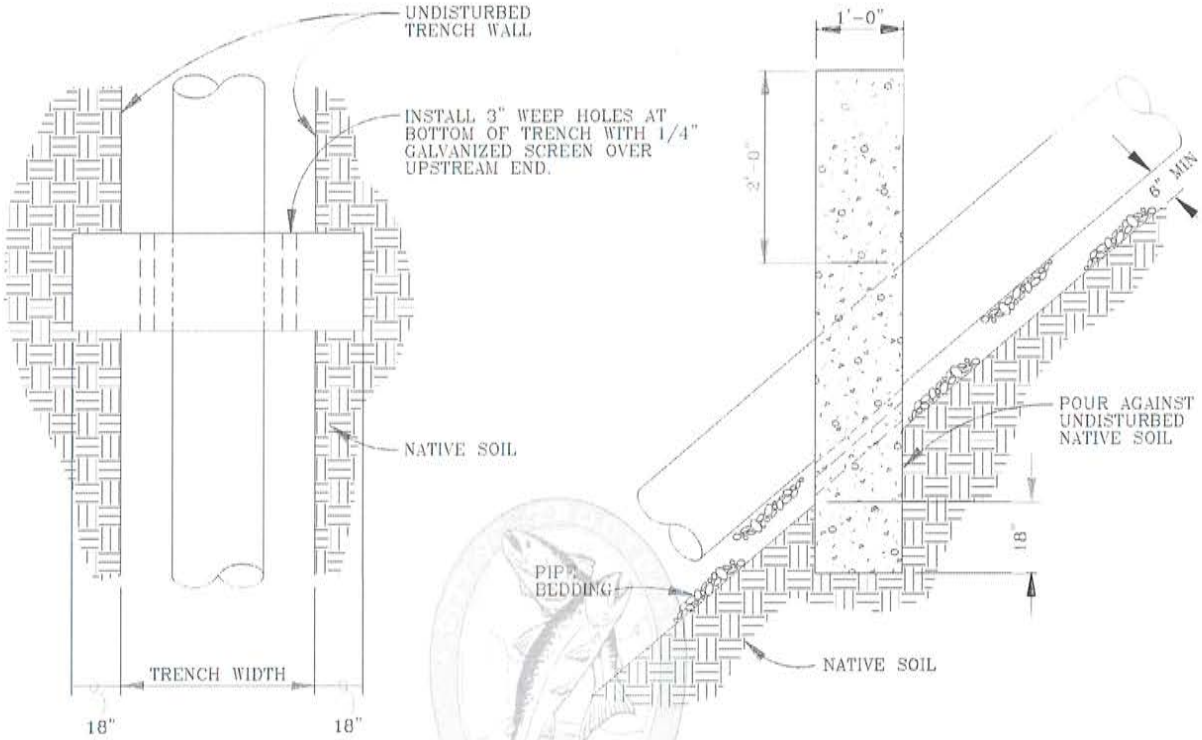


GENERAL NOTES:

1. CONCRETE ANCHOR WALLS (3300 PSI, @ 28 DAYS) SHALL BE CONSTRUCTED USING FORMS WHEN SEWERS, STORM DRAINS, AND OTHER PIPELINES ARE CONSTRUCTED WITH SLOPES 20 PERCENT OR GREATER. REMOVE FORMS PRIOR TO BACKFILLING TRENCH.

2. SPACING OF ANCHOR WALLS SHALL BE:

| SLOPE: | SPACING: |
|---|---|
| 20-34% | 35 FEET |
| 35-50% | 25 FEET |
| 50+ % | 15 FEET OR CONCRETE ENCASEMENT |

3. VISUAL INSPECTION BY CITY FORCES IS REQUIRED PRIOR TO BACKFILLING.

4. APPLIES TO WATER, STORM AND SEWER MAINS.

CITY OF TROUTDALE

*PIPE ANCHOR DETAIL*

| DATE: | DRAWING NO. |
|---|---|
| UPDATED 1997 | VIII - 15 |

FILENAME: APWA0017.DWG

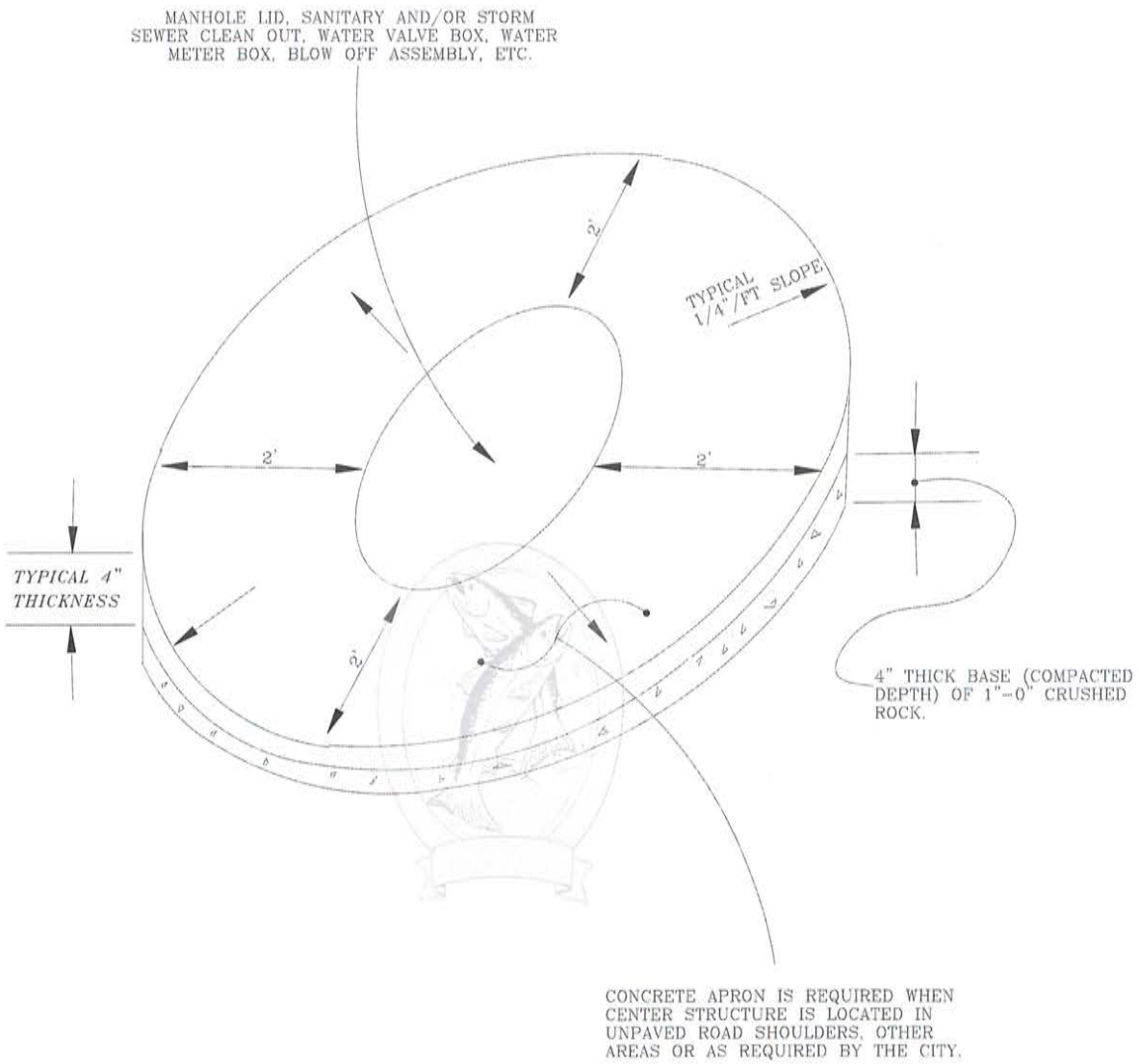


GENERAL NOTES:

1. USE 3000 PSI CONCRETE @ 28 DAYS.
2. DETAIL APPLIES TO WATER, SANITARY AND STORM UTILITY STRUCTURES.

| CITY OF TROUTDALE | |
|---|---|
| *CONCRETE APRON* | |
| DATE: UPDATED 1997 | DRAWING NO. VIII – 16 |

FILENAME: APWA0131.DWG

# EROSION CONTROL MEASURES

(Parts IX & X)

# EROSION CONTROL MEASURES

(Part IX)

* General Requirements

see IC#34 for additional information

# STANDARD EROSION CONTROL PLAN STANDARDS

**The following erosion control standards apply only to the City of Troutdale's Standard Erosion Control Plan, and shall be used in conjunction with the Standard Erosion Control Plan and the City of Gresham Erosion Control Plans Technical Guidance Handbook. Applicable standard details for the Standard Plan can be found in the Gresham erosion control handbook. The Standard Erosion Control Plan may be used only under the following circumstances:**

1. **The lot is 20,000 square feet or less.**
2. **No portion of the lot exceeds 5% slope.**

**The Standard Erosion Control Plan consists of a Base Measure, and Post Construction Measure which are listed below with reference to the applicable section number in the Erosion Control Plans Technical Guidance Handbook (City of Gresham, April, 1991 edition). The referenced sections shall be referred to for additional criteria, specifications, and details.**

## BASE MEASURE

**Install a sediment fence/barrier at the toe of the disturbed area or material stock pile. The sediment fence/barrier shall consist of the appropriate filter fabric and fabric support system, or shall be constructed of straw bales, and shall be installed in accordance with the Erosion Control Handbook. Install a gravel construction entrance (Page II - 26). The gravel construction entrance shall be clean pit run or a minimum of 3/4-inch minus gravel, shall be a minimum of 8 inches thick and 50 feet long, shall be installed over a subgrade reinforcement geotextile, and shall be the full width of the vehicle ingress and egress. Additional gravel may have to be added periodically to maintain proper functioning of pad. If gravel pad does not adequately prevent soil transport off construction site, additional measures shall be taken. (A 20' minimum pad length may be acceptable as approved for single family and duplex residential construction sites.)**

## POST CONSTRUCTION MEASURE

**Re-establish groundcover or landscape prior to removing erosion control measures (Pages IX - 4 and IX - 5).**

## SAMPLE SINGLE LOT EROSION CONTROL PLAN

**For more information on a typical single lot erosion control plan refer to Detail Drawing X-8.**

# STANDARD EROSION CONTROL PLAN STANDARDS

The following erosion control standards apply only to the City of Troutdale's Standard Erosion Control Plan, and shall be used in conjunction with the Standard Erosion Control Plan and the City of Gresham Erosion Control Plans Technical Guidance Handbook. Applicable standard details for the Standard Plan can be found in the Gresham erosion control handbook. The Standard Erosion Control Plan may be used only under the following circumstances:

1. The lot is 20,000 square feet or less.
2. No portion of the lot exceeds 5% slope.

The Standard Erosion Control Plan consists of a Base Measure, and Post Construction Measure which are listed below with reference to the applicable section number in the Erosion Control Plans Technical Guidance Handbook (City of Gresham, April, 1991 edition). The referenced sections shall be referred to for additional criteria, specifications, and details.

## BASE MEASURE

Install a sediment fence/barrier at the toe of the disturbed area or material stock pile. The sediment fence/barrier shall consist of the appropriate filter fabric and fabric support system, or shall be constructed of straw bales, and shall be installed in accordance with the Erosion Control Handbook. Install a gravel construction entrance (Page II - 26). The gravel construction entrance shall be clean pit run or 2-inch minus gravel, shall be a minimum of 8 inches thick and 50 feet long, shall be installed over a subgrade reinforcement geotextile, and shall be the full width of the vehicle ingress and egress. Additional gravel may have to be added periodically to maintain proper functioning of pad. If gravel pad does not adequately prevent soil transport off construction site, additional measures shall be taken. (A 20' minimum pad length may be acceptable as approved for single family and duplex residential construction sites.)

## POST CONSTRUCTION MEASURE

Re-establish groundcover or landscape prior to removing erosion control measures (Pages IX - 4 and IX - 5).

## SAMPLE SINGLE LOT EROSION CONTROL PLAN

For more information on a typical single lot erosion control plan refer to Detail Drawing X-8.

5-116

# EROSION CONTROL MEASURES

At a minimum, the following narrative is required on an Erosion Control Plan.

1. Approval of this erosion/sedimentation control (ESC) plan does not constitute an approval of permanent road or drainage design (e.g., size and location of roads, pipes, restrictors, channels, retention facilities, utilities, etc.)

2. The implementation of these ESC plans and the construction, maintenance, replacement, and upgrading of these ESC facilities is the responsibility of the applicant/contractor until all construction is completed and approved and vegetation/landscaping is established.

3. The boundaries of the clearing limits shown on this plan shall be clearly flagged in the field prior to construction. During the construction period, no disturbance beyond the flagged clearing limits shall be permitted. The flagging shall be maintained by the applicant/contractor for the duration of construction.

4. The ESC facilities shown on the construction plans must be constructed in conjunction with all clearing and grading activities, and in such a manner as to insure that sediment and sediment laden water do not enter the drainage system, roadways, or violate applicable water standards.

5. The ESC facilities shown on this plan are the minimum requirements for anticipated site conditions. During the construction period, these ESC facilities shall be upgraded as needed for unexpected storm events and to ensure that sediment and sediment-laden water do not leave the site.

6. The ESC facilities shall be inspected daily by the applicant/contractor and maintained as necessary to ensure their continued functioning.

7. The ESC facilities on inactive sites shall be inspected and maintained a minimum of once a month or within the 24 hours following a storm event.

8. At no time shall more than one foot of sediment be allowed to accumulate within a trapped catch basin. All catch basins and conveyance lines shall be cleaned prior to paving. The cleaning operation shall not flush sediment laden water into the downstream system.

9. Stabilized construction entrances shall be installed at the beginning of construction and maintained for the duration of the project. Additional measures may be required to insure that all paved areas are kept clean for the duration of the project.

5-117

10. Before removal of erosion control measures, vegetation must be re-established.

## TEMPORARY GRASSES AND PERMANENT VEGETATIVE COVER

### Purpose

To reduce erosion and sedimentation by stabilizing exposed soils with vegetation and mulching.

### Conditions Where Practice Applies

1. Ground surfaces exposed during the wet season (November 1 through April 30).

2. Areas which will not be subjected to heavy wear by on-going construction traffic.

3. Exposed ground surfaces at end of construction period (permanent cover must be established prior to removal of any erosion control measures).

4. Temporary or permanent stabilization of new or disturbed ditches or swales.

### Design Criteria/Specifications: Temporary Erosion Control Grasses

1. Temporary grass cover measures must be fully established by November 1 or other cover measures will have to be implemented until adequate grass coverage is achieved. To establish an adequate grass stand for controlling erosion by November 1, seeding measures must occur by September 1.

2. Hydromulch shall be applied with grass seed at a rate of 2000 lb./acre. (Seed must be applied at 200 lb./acre. Refer to Paragraph 6 on Page IX-4.) On slopes steeper than 10 percent, hydroseed and mulch shall be applied with a bonding agent (tackifier). Application rate and methodology to be in accordance with seed supplier recommendations.

3. If straw is used in conjunction with hydromulch, it must be dry, loose, weed-free, and applied at a rate of 4000 lb./acre. Anchor straw by working in by hand or with equipment (rollers, cleat tracks, etc.).

4. Straw mulch shall be spread uniformly immediately following seeding.

5. Soil Preparation - Top soil should be prepared according to landscape plans, if available, or recommendations of grass seed supplier. It is recommended that slopes be roughened before seeding by"track-walking," (driving a crawling tractor up and down slopes to

leave a pattern of cleat imprints parallel to slope contours) or other method to provide more stable sites for seeds to rest.

6. Seeding - Required seed mixes are as follows. Similar mixes may be substituted if approved by the City and still total 200 lb/acre.

   a. Dwarf Grass Mix (low height, low maintenance): Dwarf Perennial Ryegrass, 80% by weight; Creeping Red Fescue, 20% by weight; application rate: 100 pounds minimum per acre.

   b. Standard Height Grass Mix: Annual Ryegrass, 40% by weight; Turf-type Fescue, 60% by weight; Application rate: 100 pounds minimum per acre.

7. Fertilization for grass seed - In accordance with supplier's recommendations. Development areas within 50 feet of water bodies and wetlands must use a non-phosphorus fertilizer.

8. Watering - Seeding shall be supplied with adequate moisture to establish grass. Supply water as needed, especially in abnormally hot or dry weather or on adverse sites. Water application rates should be controlled to provide adequate moisture without causing runoff.

9. Re-seeding - Areas which fail to establish grass cover adequate to prevent erosion shall be re-seeded as soon as such areas are identified, and all appropriate measures taken to establish adequate cover.

# STRAW MULCH

## Purpose

To reduce erosion by providing a protective cover over disturbed bare or reseeded soils. Also can be used to enhance success of seeding/revegetation.

## Conditions Where Practice Applies

1. As a cover on ground surfaces and stockpiles exposed during the wet season (November 1 through April 30).

2. As a mulch to enhance vegetation establishment in areas that have been seeded.

## Design Criteria/Specifications

1. Loose, weed-free straw mulch shall be applied at a rate of no less than 4000 pounds (2 tons) per acre, and shall have a minimum depth in-place of 2 inches. It shall be spread uniformly throughout the entire area and integrated into the top layer of soil.

2. Mulch must be stabilized in place by hand or machine punching the straw into the soil.

## PLASTIC SHEET COVERING

### Purpose

To provide immediate erosion protection to slopes and disturbed areas when vegetative cover cannot be achieved due to soils, slopes or time of year. To provide erosion protection on soils, spoils, and other erodible stockpiles.

### Conditions Where Practice Applies

1. Disturbed areas which require immediate erosion protection.

2. On areas of steep slope (greater than 50 percent) and areas of moderate slope that are prone to erosion.

3. On ground surfaces and stockpiles exposed during wet weather season (November 1 through April 30).

4. As a temporary measure to provide erosion protection and assist in germination on areas seeded between November 1 and March 31.

### Design Criteria/Specifications

1. Plastic sheeting shall be polyethylene and have a minimum thickness of 6 mil.

2. Covering shall be installed and maintained tightly in place by using sandbags or tires on ropes with a maximum 10 foot grid spacing in all directions. All seams shall be taped or weighted down full length and there shall be at least a 12-inch overlap of all seams. For seams parallel to the slope contour, the uphill sheet shall overlap the downhill sheet. No runoff shall be allowed to run under the plastic covering.

3. Drainage from areas covered by plastic sheeting shall be controlled such that no discharge occurs directly onto uncontrolled, disturbed areas of the construction site.

4. Clear plastic sheeting may be installed on areas seeded between November 1 to March 31 to provide a greenhouse-type environment, and remain until vegetation is firmly established.

## SEDIMENT TRAPS AND PONDS

### Purpose

To collect and store sediment eroded from exposed ground surfaces disturbed during the construction period, prior to establishment of permanent vegetation and drainage facilities.

### Conditions Where Practice Applies

1. Downhill of areas with exposed soils during the wet season (November 1 through April 30).

2. Sediment Traps: where the tributary drainage area is 3 acres or less and slopes are less than 50 percent.

3. Sediment Ponds: where the tributary drainage area is 10 acres or less and slopes are less than 50 percent.

### Design Criteria/Specifications

Temporary interceptor dikes or swales may be constructed to divert runoff to sediment traps or ponds.

### Sediment Traps

The sediment trap may be formed completely by excavation or by construction of a compacted embankment. It shall have a sediment storage depth not to exceed 1.5 feet, topped by a 2 foot deep settlement zone. Sediment trap side slopes shall be 3:1 or flatter. The outlet of the trap should be a weir/spillway, providing a minimum 1 foot overflow depth between the spillway and embankment.

A filter fabric fence or similar filter must be constructed to filter runoff from the trap prior to discharge from the construction site.

1. See Detail Drawing X-10 for details.

2. Calculate the required sediment storage volume using the Soil Conservation Service (SCS) Universal Soil Loss Equation and assuming a minimum one year sediment accumulation period for design purposes. To convert tons of sediment as calculated to cubic feet, multiply by 12.1 cu. ft. per ton. For information on the Universal Soil Loss Equation, contact the Soil Conservation Service.

3. Determine the bottom surface area of the sediment trap using the calculated sediment volume and the maximum 1.5 foot depth and 3:1 side slope requirements.

4. Determine the total trap dimensions by adding an additional 2 feet of depth for settling volume (before overtopping of spillway) above the sediment storage volume, while not exceeding 3:1 side slopes.

5. A 3:1 ratio of trap length to width is desirable. Length is defined as the average distance from the inlet to the outlet of the trap.

Sediment Ponds

A sediment pond may be formed by partial excavation and/or by construction of a compacted embankment. It may have one or more inflow points carrying polluted runoff. Baffles to spread the flow throughout the pond should be included. A securely anchored riser pipe is the recommended principal discharge mechanism with an emergency overflow spillway. The rise pipe should be perforated and covered with filter fabric and gravel "cone" for filtration, or solid with a 1 inch diameter dewatering hole and perforated drain pipe. Outlet protection shall be provided to reduce erosion at the pipe outlet. A filter fabric fence or similar filter must be constructed to filter runoff from the pond prior to discharge from the construction site.

1. The sediment pond shall have a sediment storage depth no greater than three feet, topped by a two foot (minimum) to four foot (maximum) deep settlement zone and an additional one foot minimum of freeboard. The pond side slopes shall be 3:1 or flatter.

2. See Detail Drawing X - 11.

3. The sediment storage volume is determined in the same manner as mentioned on the previous page.

4. The pond riser pipe and outlet pipe shall be sized to carry the ten year design storm (or as other wise required by the City).

5. A 3:1 ratio between the pond length and width is desirable. Length is defined as the average distance from the inlet to the outlet of the trap. Use baffles in the pond to help prevent short-circuiting and to increase the effective pond length where site conditions prohibit constructing a pond with a direct 3:1 length to width ratio.

## TEMPORARY INTERCEPTOR DIKES AND SWALES

### Purpose

**To intercept storm runoff from drainage areas above unprotected slopes and direct to a stabilized outlet. To intercept storm runoff from a disturbed site and direct it to a sediment trap or pond.**

### Conditions Where Practice Applies

1. **Where the volume and velocity of runoff from disturbed slopes must be reduced. When an interceptor dike or swale is placed above a disturbed slope, it reduces the volume of water reaching the disturbed area by intercepting runoff from above.**

2. **Where sediment traps or ponds are to be used. Interceptor dikes and swales can be used to direct site runoff to a sediment trap or pond.**

### Design Criteria/Specifications

1. **Intercepted runoff must be directed to a stabilized area such that no erosion occurs due to the additional water and velocity, or to a sediment pond or trap.**

2. **See Detail Drawing X - 7 for details. Straw Bales may also be used to intercept runoff. See Section X - 2, for installation criteria and specifications.**

3. **It is recommended that interceptor dikes and swales be stabilized with approved cover before put into use. Such cover may include grass, rock or erosion blankets. If cover is not used, then some type of outlet control must be used such as biofilter bags, straw bales, etc.**

4. **Spacing between interceptor dikes and swales along slope contours is as follows:**

| Slope | Spacing |
|---|---|
| < 5% | 300 feet |
| 5-10% | 200 feet |
| 10-40% | 100 feet |

5. **Minimize construction traffic over dikes and swales.**

6. **The upslope side of interceptor dikes shall provide positive drainage to the dike outlet. Provide energy dissipation measures as necessary to minimize erosion at dike outlet.**

7. **Grades for drainage parallel to interceptor dikes shall be between 0.5 and 1.0 percent.**

8. Maximum grade of interceptor swales shall be 5 percent, and provide positive drainage to outlet.

9. Outlets shall lead to a low point on site or to a sediment trap/pond where sediment can settle out and runoff is then discharged.

10. Temporary dikes and swales shall be graded out at the completion of construction, when permanent vegetation has been established.

## EROSION CONTROL BLANKETS

### Purpose

To provide immediate protection and physical stabilization of disturbed soils. Typically used when vegetative cover cannot be achieved due to soils, slopes or time of year. Can be used to enhance success of seeding, planting and/or sodding.

### Conditions Where Practice Applies

1. On areas of steep slopes 20 percent and greater and areas of moderate slopes that are prone to erosion.

2. As a cover on ground surfaces exposed during the wet season (November 1 through April 30).

3. As supplemental aid to seed and/or mulch treatment on slopes or in ditches or swales.

### Design Criteria/Specifications

1. Erosion control blankets may be used on a range of grades from level areas up to near vertical slopes. Erosion control blankets must contain an organic mulch such as straw or wood fiber. The blanket must be applied so that it is in complete contact with the soil. If it is not, erosion will occur beneath it. Erosion control blankets shall be securely anchored to the slope in accordance with manufacturer's recommendations. See Detail Drawing X-12 for details.

## TEMPORARY SEDIMENT FENCES

### Purpose

**To reduce the transport of sediment from a construction site by providing a temporary physical barrier to sediment and reducing runoff velocities.**

### Conditions Where Practice Applies

1. **Down slope of disturbed areas where runoff occurs as sheet runoff.**
2. **At the toe of soil stock piles.**
3. **At intervals as required by the City.**
4. **At grade breaks exceeding 20 percent.**
5. **Following discharge from a sediment trap or pond**
6. **Sediment fences shall not be installed across streams.**

### Design Criteria/Specifications

1. **See Detail Drawing X - 1 for details.**
2. **Selection of filter fabric tensile and bursting strength depends on the slope characteristics. The use of standard or heavy duty filter fabric shall meet design standards. Synthetic filter fabric shall contain ultraviolet ray inhibitors and stabilizers to provide a minimum of 6 months of expected usable construction life at a temperature range of 0 degrees to 120 degrees. Selection shall be based on standard engineering principles for design.**
3. **Standard or heavy duty filter fabric fence shall have manufactured stitched loops for 2"x 2" post installation. Stitched loops shall be installed on the up-hill side of the sloped area, with posts spaced a maximum of 6 feet apart and driven securely into the ground a minimum of 24 inches..**
4. **Filter fabric fence shall have a minimum vertical burial of 6 inches. All excavated material from filter fabric fence installation shall be firmly redeposited along the entire trenched area on the uphill side of the fence. The filter fabric fence shall be installed to follow the contours where feasible.**

5. The physical integrity of all materials shall be sufficient to meet the requirements of their intended use and withstand normal wear and tear.

6. Where practical the filter fabric shall be purchased in a continuous roll to the length of the barrier to avoid use of joints. When joints are necessary, 2"x 2" posts shall be interlocked with each other and be attached securely.

7. Sediment fences shall be inspected by applicant/contractor immediately after each rainfall and at least daily during prolonged rainfall. Any required repairs, relocations or additions shall be made immediately.

8. At no time shall more than one foot depth of sediment be allowed to accumulate behind a sediment fence. Sediment should be removed or regraded into slopes, and the sediment fences repaired and reestablished as needed.

9. Filter fabric fences shall be removed by the general contractor when they have served their usefull purpose, but not before the upslope area has been permanently protected and stabilized.

## STRAW BALE SEDIMENT BARRIER/BIO-FILTER BAGS

### Purpose

To reduce the transport of sediment from a construction site by providing a temporary physical barrier to sediment and reducing runoff velocities. Also may be used to divert runoff around active work areas or into sediment filtration/sedimentation areas. Straw bales shall not be considered a means of filtering sediment.

### Conditions Where Practice Applies

1. Downslope of disturbed areas where runoff occurs as sheet runoff.

2. At the toe of the soil stock piles.

3. Bio-Filter bags can be used in all newly constructed or existing drainage ditches and/or swales.

4. Note: see Detail Drawing X - 3 "Bio-Filter Bags In Ditches and Swales" for use of Bio-Filter as flow interceptor dikes.

5. See Detail Drawing X - 6 for Bio-Filter Bag catch basin protection. Straw bales shall not be used for catch basin protection.

Superceded by IC#11

6. Straw bales and bio-filter bags shall not be installed across streams.

### Design Criteria/Specifications

1. See Detail Drawing X - 2 for details of straw bale barriers, and Bio-Filter Bags in Detail Drawings X - 3 through X - 6.

2. Straw bales shall be standard 40 to 60 pound rectangular bales of cereal grain or seed straw.

3. Bio-filter bags shall be clean 100 percent recycled wood product waste. Size of bag shall be 18x8x3O inches and weigh approximately 45 pounds, and made of 1/2 inch plastic mesh.

4. Stakes shall be wood of size as shown on Detail Drawing X - 2 and driven through bales and into ground to a minimum depth of 12 inches.

5. Stakes for Bio-Filter bags shall be installed as specified in the Notes on Detail Drawings X-3 through X-6.

6. Straw bales shall be keyed into existing ground 2 to 4 inches.

7. Straw bale sediment barriers and Bio-Filter bags may be left in place or used as mulch after completion of site work if approved by the City.

8. At no time shall more than one foot of sediment be allowed to accumulate behind straw bale sediment barriers and/or Bio-Filter bags. Sediment shall be removed or regraded into the slope and/or new lines of barriers installed uphill of sediment-laden barriers.

5130

## CONTINUOUS GEOSYNTHETIC BERMS FILLED WITH SOIL, SAND OR ROCK

### Purpose

To reduce the transport of sediment from a construction site by providing a temporary physical barrier which either contains sediment while reducing runoff velocity or can act as a containment area for sediment and water.

### Conditions Where Practice Applies

1. Can be used as an alternative to a sediment fence or straw bale/bio-filter bag.
2. At the toe of soil stock piles.
3. Down slope of disturbed areas where runoff occurs as sheet runoff.
4. At intervals as required by the City.
5. At grade breaks exceeding 20 percent.
6. To assist in the construction of sediment traps/ponds, check dams, or other structures.
7. Continuous berms shall not be installed across streams.

### Design Criteria/Specifications

1. See Detail Drawing X-13 for details.
2. A continuous berm is made of geosynthetic fabric wrapped around either native soil, sand, or rock. The type of fill material varies depending on the berm's use. Before installation the fabric must be approved by the City.
3. If the continuous berm is used as an alternative to a sediment fence for example, then it must be filled with a material which allows water to pass through such as pea gravel or 3/4" - 1" rock. At no time shall more than one foot depth of sediment be allowed to accumulate behind the berm. Sediment should be removed or regraded into slopes and the berm repaired as necessary.
4. If the continuous berm is used as a sediment trap where water and sediment accumulate at a low point, the majority of the berm must be filled with native soil or sand. The low point area must contain material which allows water to pass through such as pea gravel or 3/4" - 1" rock. The low point area must be 3 feet long at a minimum with slits cut into the fabric to allow the discharge of water.

5. When installing a continuous berm each end must be angled inward to prevent sediment and water from flowing around the berm.

6. For whichever type of application the continuous berm is used, inspections must be on a routine basis and immediately after each rainfall. Any required repairs, relocations or additions shall be made immediately.

7. Once the upslope area has been permanently protected and stabilized, removal of the berm is completed by slitting the berm, spilling the fill material and incorporating it into the existing soil, and properly disposing of the fabric.

## LIQUID EROSION CONTROL BLANKETS

### Purpose

To provide immediate protection and physical stabilization of disturbed soils. Typically used when vegetative cover cannot be achieved due to soils, slopes or time of year. Can be used in combination with seed and fertilizer to enhance revegetation efforts.

### Condition Where Practice Applies

1. As an alternative to erosion control blankets.

2. On areas of steep slope (20 percent and greater) and areas of moderate slope that are prone to erosion.

3. As a cover on ground surfaces exposed during the wet season (November 1 through April 30) where it is too late in the year to hydroseed.

4. As an enhancement to hydroseeding, particularly in areas of steep slope (20 percent and greater).

### Design Criteria/Specifications

1. Liquid erosion control blankets, such as a product called "Soil Guard" or an equivalent as approved by the City, may be used on a range of grades from level areas up to near vertical slopes.

2. The liquid erosion control blanket mixture must contain 200 lb. of seed/acre when applied. The mixture must be applied during dry weather. Following application, there needs to be 24 to 48 hours of dry weather to allow the mixture to solidify. The mixture, once solidified, must have a minimum thickness of 3/8".

3. Liquid erosion control blanket mixes must be applied by a certified applicator approved by the City.

4. Seeding specifications are as follows:

   200 lb. of seed/acre is the required application rate. Below are the required seeding mixes. (Similar mixes may be substituted if approved by the City and total seed used is still 200 lb./acre).

   - Dwarf Grass Mix (low height, low maintenance): Dwarf Perennial Ryegrass, 80% by weight; Creeping Red Fescue, 20% by weight; application rate: 100 pounds per acre.

- Standard Height Grass Mix: Annual Ryegrass, 40% by weight; Turf-type Fescue, 60% by weight; Application rate: 100 pounds per acre.

5. If the liquid erosion control blanket fails to form a consistent 3/8" layer, re-application may be necessary.

# YARD DEBRIS COMPOST

## Purpose

To reduce erosion by providing cover over disturbed bare or reseeded soils. Also can be used to enhance success of seeding/revegetation.

## Conditions Where Practice Applies

1. As a cover on ground surfaces and stockpiles exposed during the wet season (November 1 through April 30).

2. As an alternative to straw mulch to enhance vegetation establishment in areas that have been seeded.

## Design Criteria/Specifications

1. Do not mix seed with compost.

2. If compost is used to enhance hydroseeding applied by September 1, then compost shall be applied at a uniform 1" layer.

3. If compost is applied after November 1, it shall be applied at a uniform 3" layer.

4. Slope Specifications:

   If the slope is less than 8 percent, apply fine compost.

   A. If the slope is between 8 and 20 percent, apply medium compost.
   B. If the slope is greater than 20 percent, apply coarse compost.
   C. Compost cannot be used on a slope greater than 50 percent.

5. Compost must be free of all foreign materials such as plastic, metal, or other such debris.

6. Compost must be mature and stabilized with moisture content less than 25 percent.

7. A list of yard debris compost processors is available on request from the City.

# EROSION CONTROL MEASURES

## (Part X)

## Construction Details

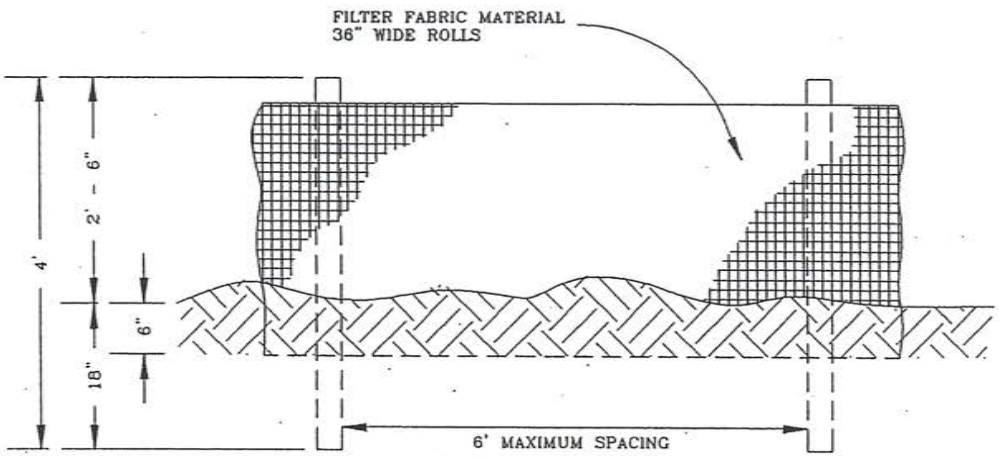


FRONT VIEW

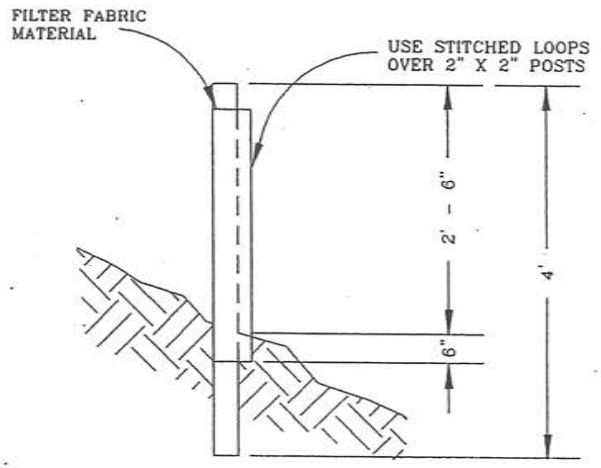


SIDE VIEW

GENERAL NOTES:

1. BURY BOTTOM OF FILTER FABRIC 6" VERTICALLY BELOW FINISHED GRADE.
2. 2" X 2" FIR, PINE OR STEEL FENCE POSTS.
3. STITCHED LOOPS TO BE INSTALLED UPHILL SIDE OF SLOPE.
4. COMPACT ALL AREAS OF FILTER FABRIC TRENCH.
5. NO VARIENCES TO THE ABOVE ARE ALLOWED WITHOUT PRE-AUTHORIZATION FROM THE CITY.

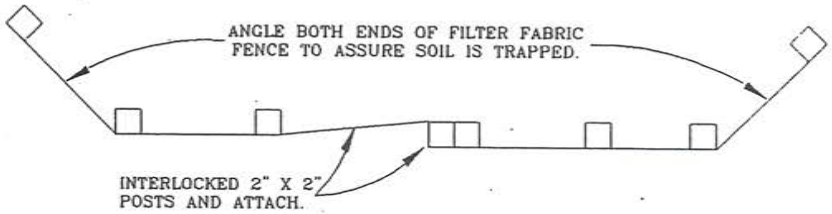


TOP VIEW

CITY OF TROUTDALE

TEMPORARY
SEDIMENT FENCE

DATE: UPDATED 1997

DRAWING NO. X - 1

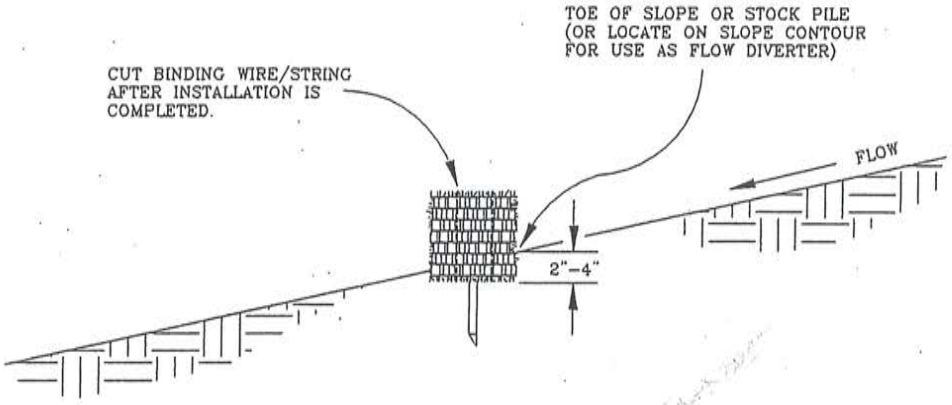


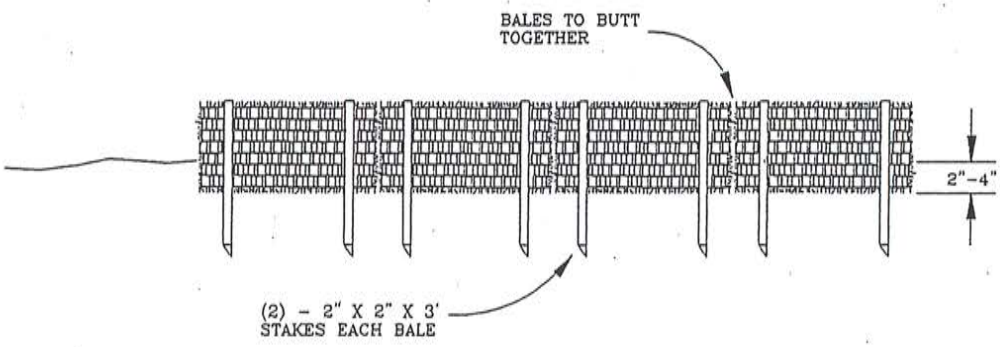


GENERAL NOTES

1. EMBED BALES 2" TO 4" DEEP.
2. DRIVE STAKES A MINIMUM 12" INTO THE GROUND.
3. DRIVE STAKES FLUSH TO THE TOP OF BALES.

CITY OF TROUTDALE

*TEMPORARY STRAW BALE SILT BARRIER*

| DATE: | DRAWING NO. |
|---|---|
| UPDATED 1997 | X - 2 |

FILENAME: APWA0501 DWG

S-138

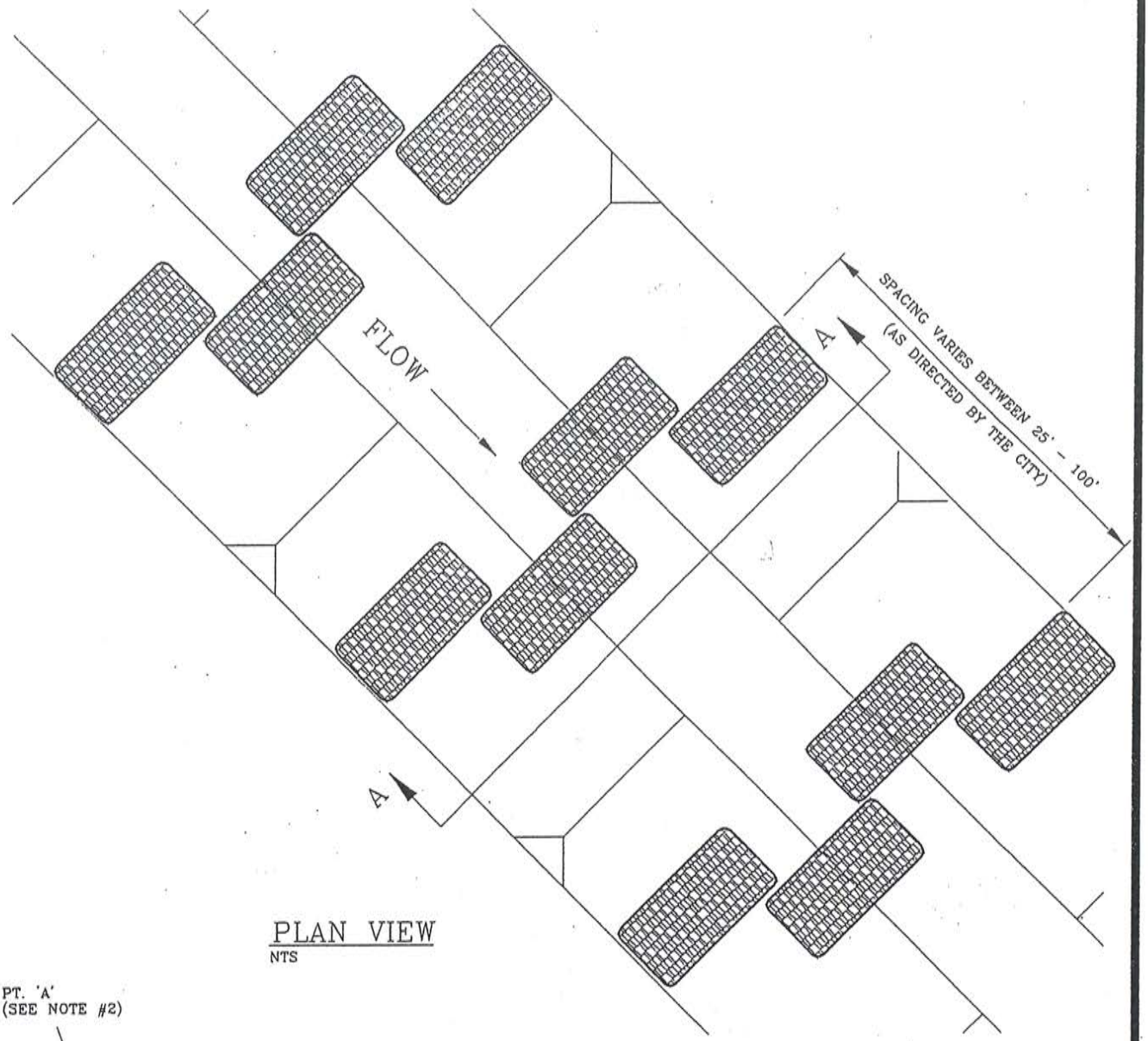


PLAN VIEW
NTS

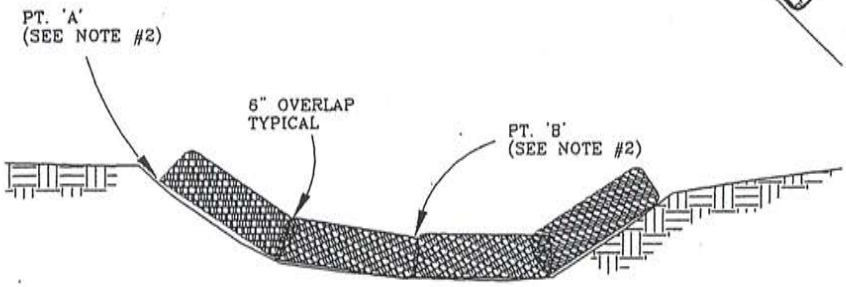


SECTION A-A
NTS

GENERAL NOTES

1. STAKING OF BAGS MAY BE REQUIRED USING (2) 1" X 2" WOOD STAKES OR APPROVED EQUAL PER BAG.
2. PT. 'A' MUST BE 6" MINIMUM HIGHER THAN PT. 'B'.

CITY OF TROUTDALE

*BIOFILTER BAGS IN DITCHES & SWALES*

| DATE: | DRAWING NO. |
|---|---|
| UPDATED 1997 | X - 3 |

FILENAME: APWA0502.DWG

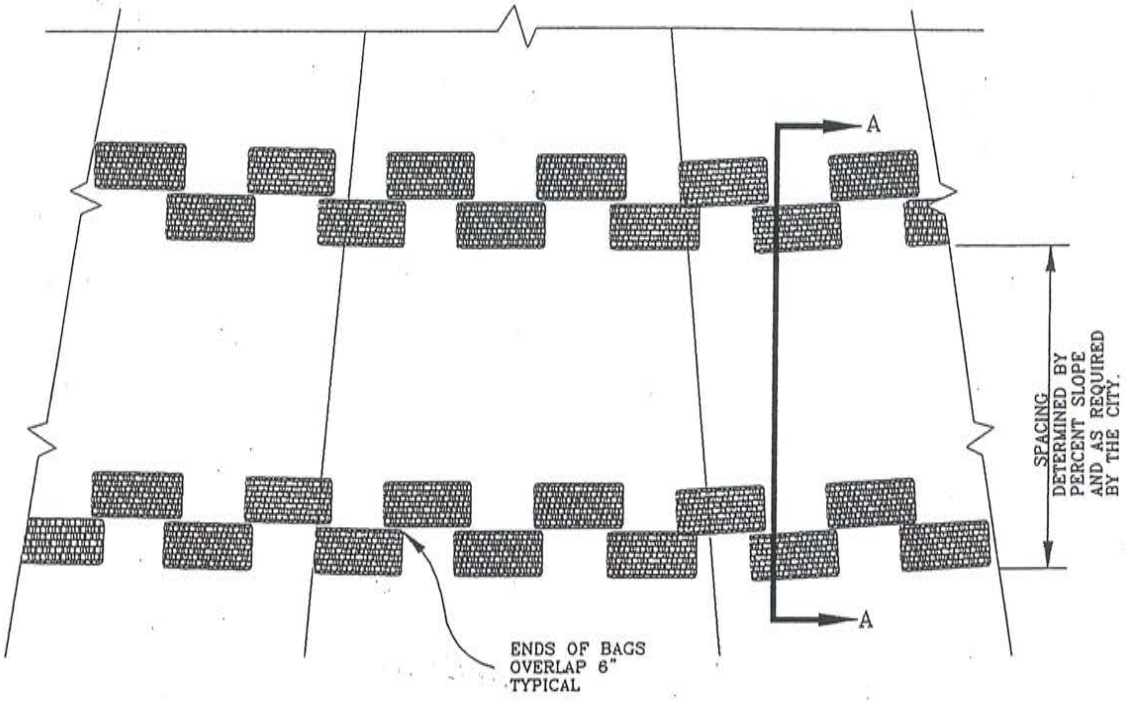


PLAN VIEW
NTS

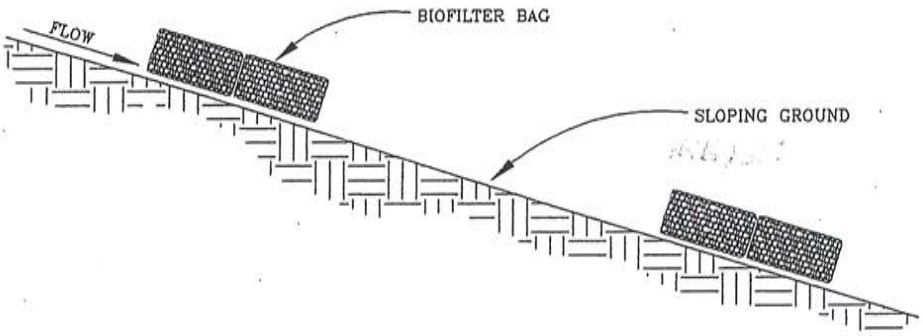


SECTION A–A
NTS

GENERAL NOTES

1. STAKING OF BAGS MAY BE REQUIRED USING (2) 1" X 2" WOOD STAKES OR APPROVED EQUAL PER BAG.

CITY OF TROUTDALE

*BIOFILTER BAGS FOR OVERLAND WATER FLOW*
(OPTION 1)

| DATE: | DRAWING NO. |
|---|---|
| UPDATED 1997 | X – 4 |

FILENAME: APWA0503.DWG

5-140

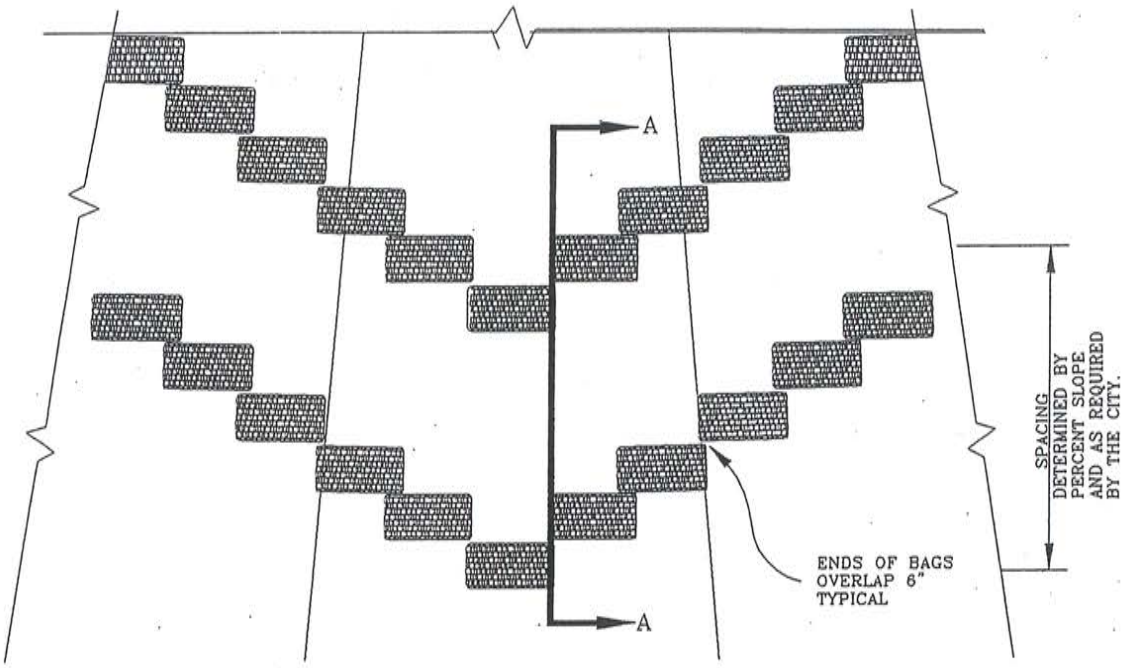


PLAN VIEW
NTS

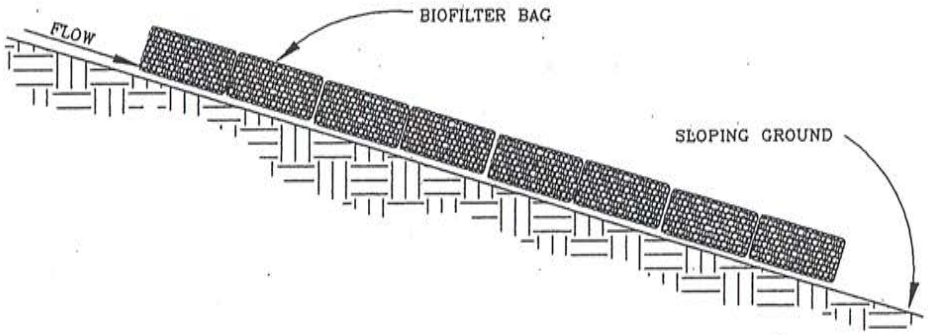


SECTION A–A
NTS

GENERAL NOTES

1. STAKING OF BAGS MAY BE REQUIRED USING (2) 1" X 2" WOOD STAKES OR APPROVED EQUAL PER BAG.

CITY OF TROUTDALE

*BIOFILTER BAGS FOR OVERLAND WATER FLOW*

(OPTION 2)

| DATE: | DRAWING NO. |
|---|---|
| UPDATED 1997 | X – 5 |

FILENAME: APWA0504.DWG

S-141

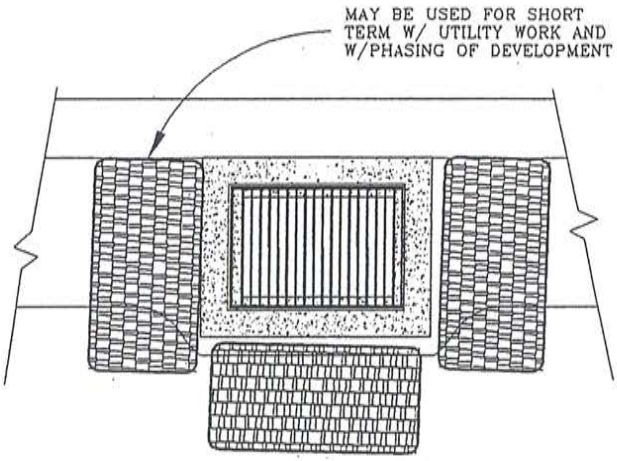


CATCH BASIN

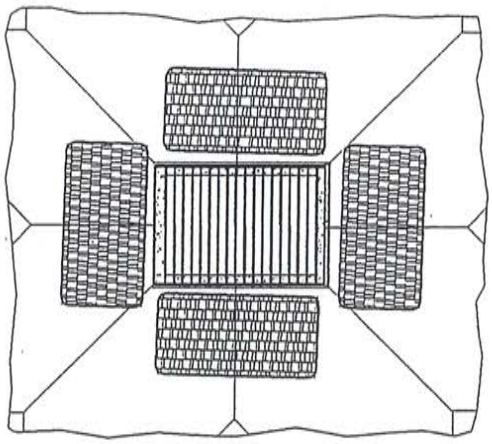

AREA DRAIN

Deleted see IC#11

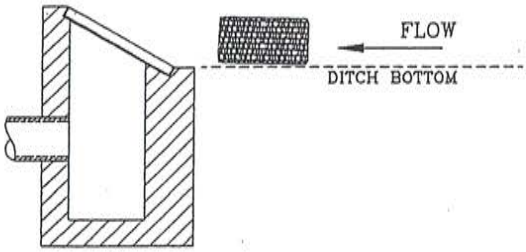


DITCH INLET
SECTION A–A

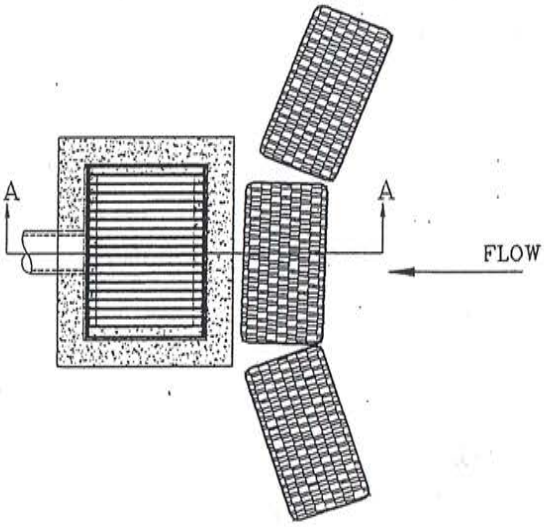


PLAN

CITY OF TROUTDALE

*BIOFILTER BAG-PROTECTED CATCH BASINS DETAIL*

| DATE: | DRAWING NO. |
|---|---|
| UPDATED 1997 | X – 6 |

FILENAME: APWA0505.DWG

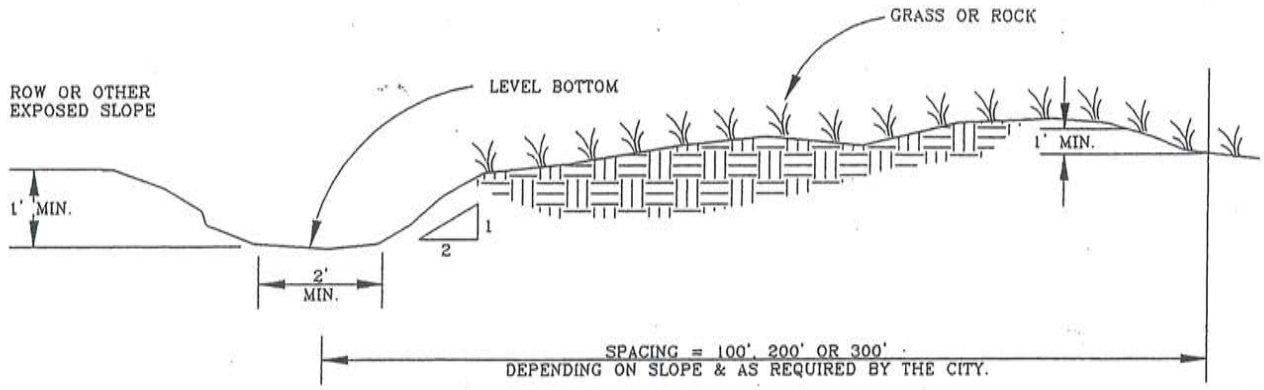


| | |
|---|---|
| BOTTOM WIDTH | 2' MINIMUM, THE BOTTOM WIDTH SHALL BE LEVEL |
| DEPTH | 1' MINIMUM |
| SIDE SLOPE | 2H:1V OR FLATTER |
| GRADE | MAXIMUM 5%, WITH POSITIVE DRAINAGE TO A SUITABLE OUTLET (SUCH AS SEDIMENTATION POND) |

## TEMPORARY INTERCEPTOR SWALE

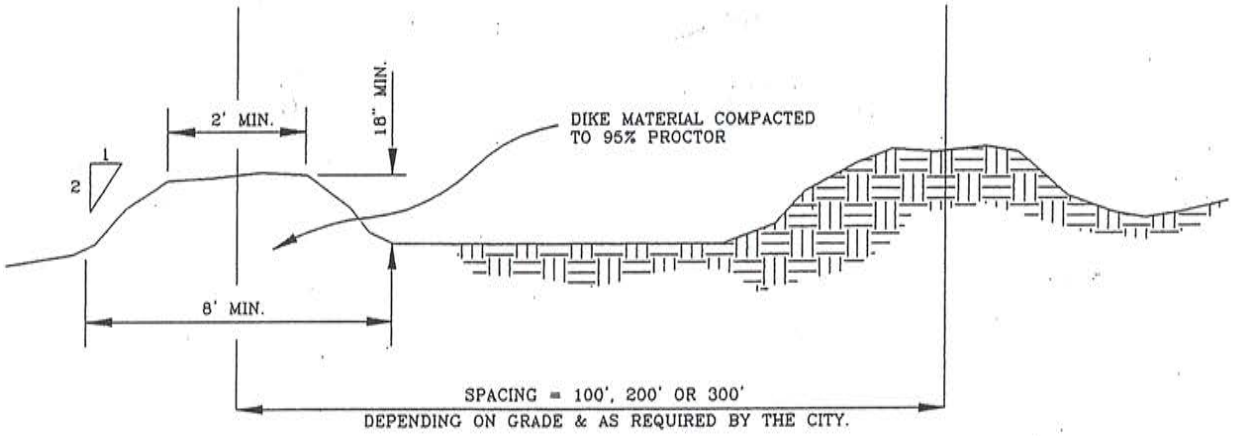


## TEMPORARY INTERCEPTOR DIKE

CITY OF TROUTDALE

*TEMPORARY SITE INTERCEPTOR (SWALES & DIKES)*

| DATE: | DRAWING NO. |
|---|---|
| UPDATED 1997 | X - 7 |

FILENAME: APWA0508.DWG

3-147

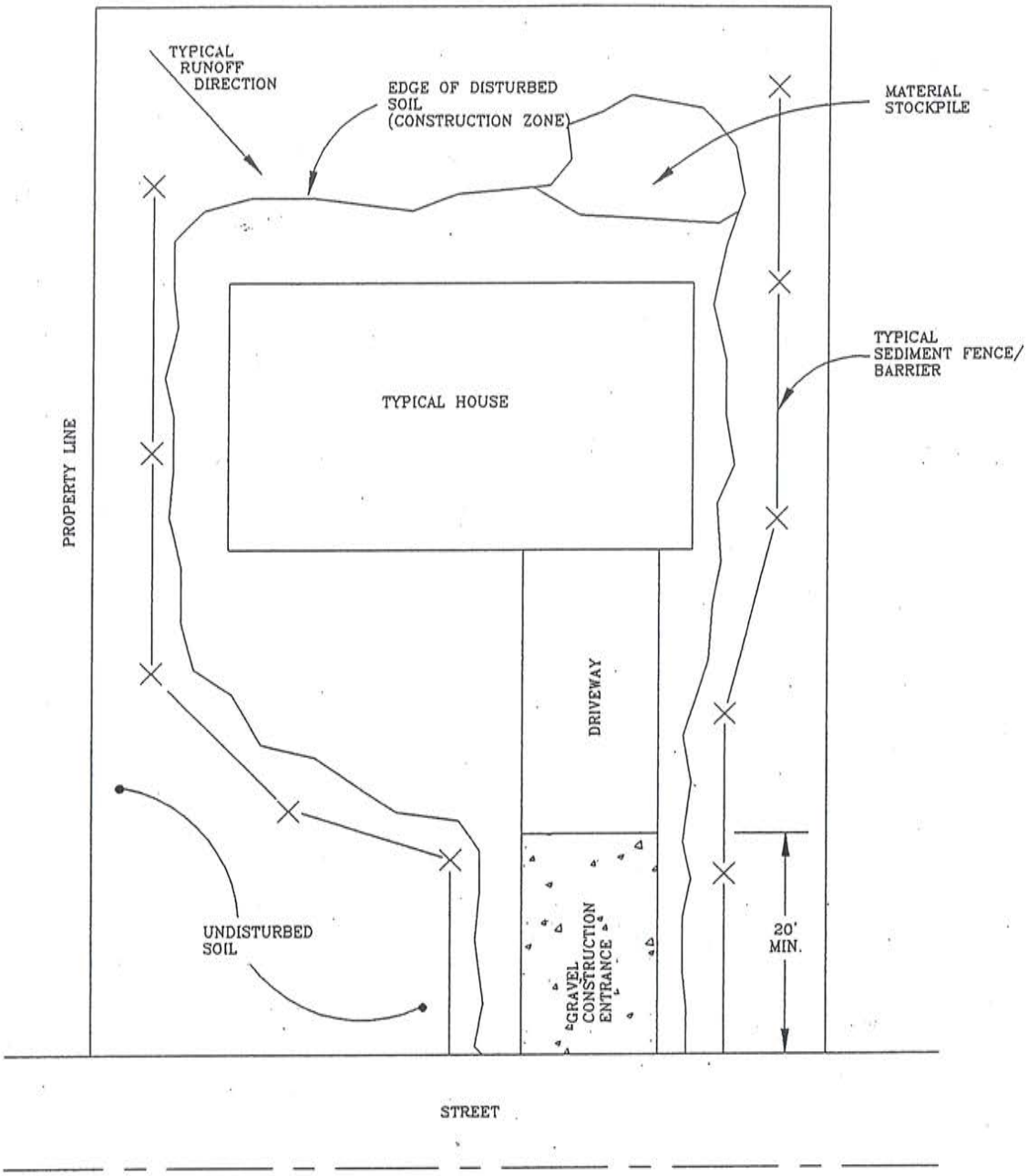


CITY OF TROUTDALE

*EROSION CONTROL FOR SINGLE LOTS*

| DATE: | DRAWING NO. |
|---|---|
| UPDATED 1997 | X - 8 |

FILENAME: APWA0507.DWG

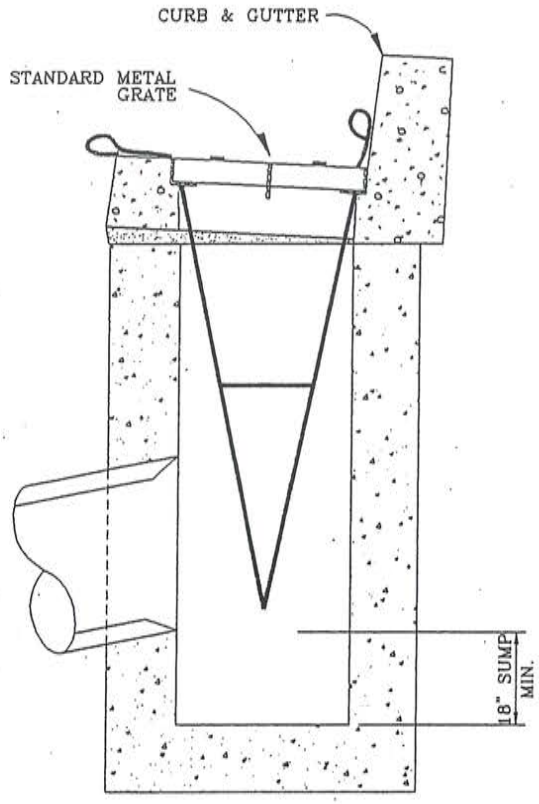


INSTALLATION DETAIL

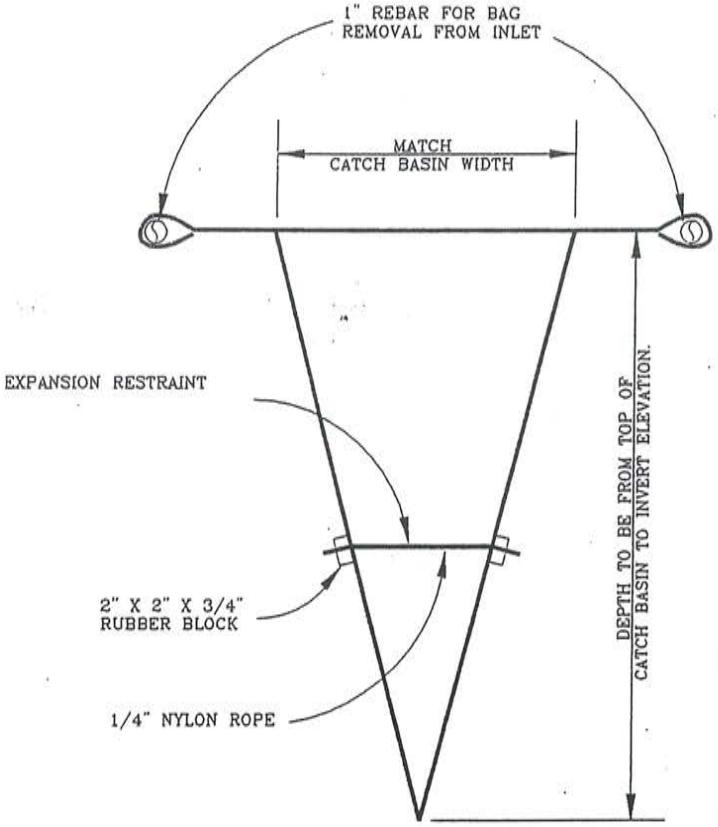


SILT SACK DETAIL

GENERAL NOTES:

1. EMPTY SILT SACK AS NECESSARY.

| CITY OF TROUTDALE | |
|---|---|
| FILTER BAG INLET DETAIL | |
| DATE: UPDATED 1997 | DRAWING NO. X - 9 |

FILENAME: APWA050B.DWG

5-145

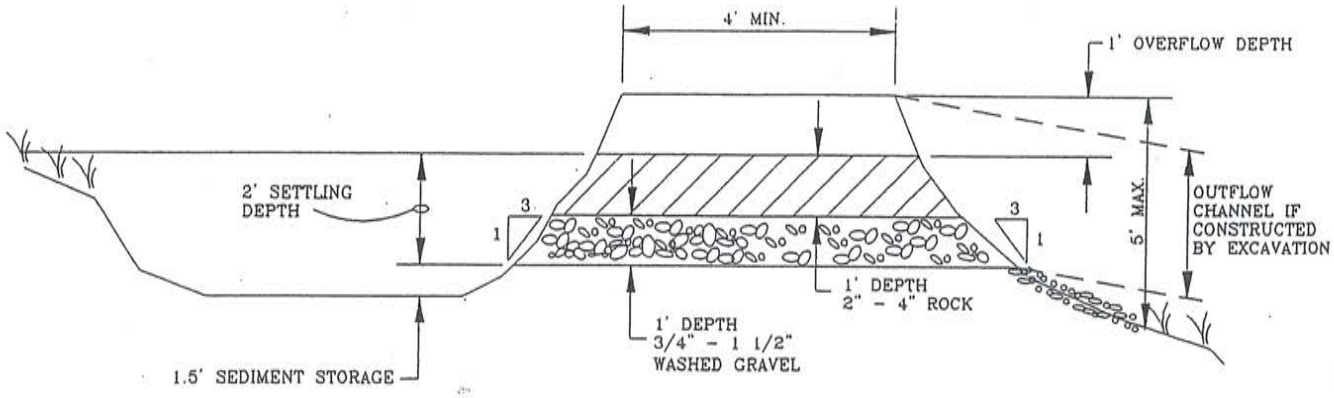


## CROSS SECTION

NTS

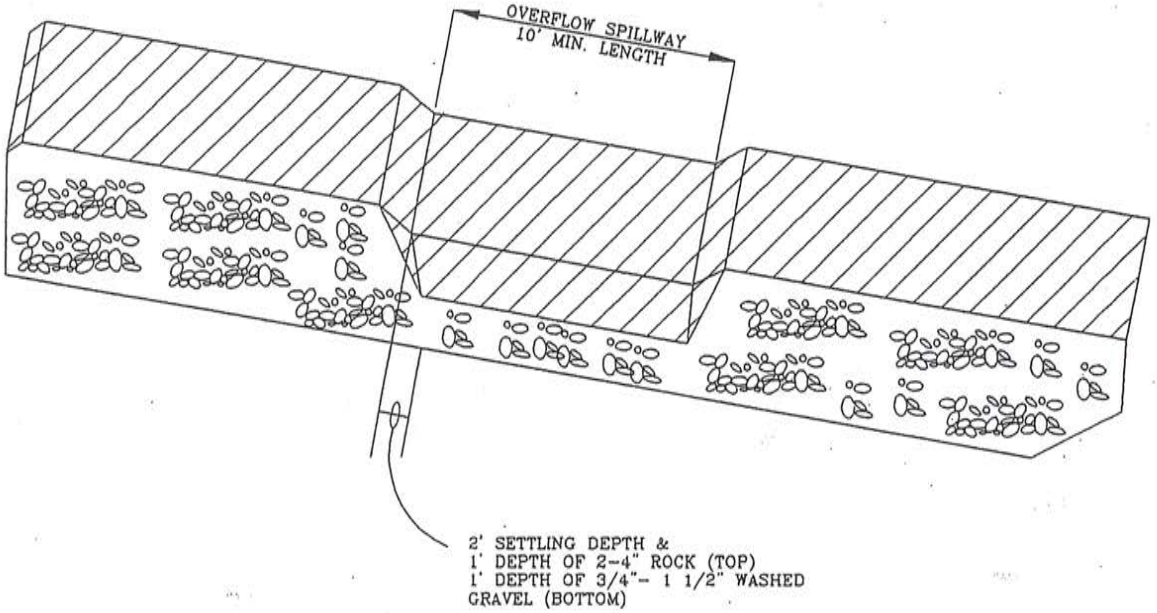


## SEDIMENT TRAP OUTLET

NTS

GENERAL NOTES

1. SEDIMENT TRAP MAY BE CONSTRUCTED BY EXCAVATION OR BY BUILDING A BERM.
2. A FILTER FABRIC FENCE OR SIMILIAR FILTER MUST BE CONSTRUCTED TO FILTER RUNOFF FROM THE SEDIMENT TRAP PRIOR TO DISCHARGE FROM THE CONSTRUCTION SITE.

| CITY OF TROUTDALE | |
|---|---|
| *SEDIMENT TRAP* | |
| DATE: UPDATED 1997 | DRAWING NO. X - 10 |

FILENAME: APWA0509.DWG

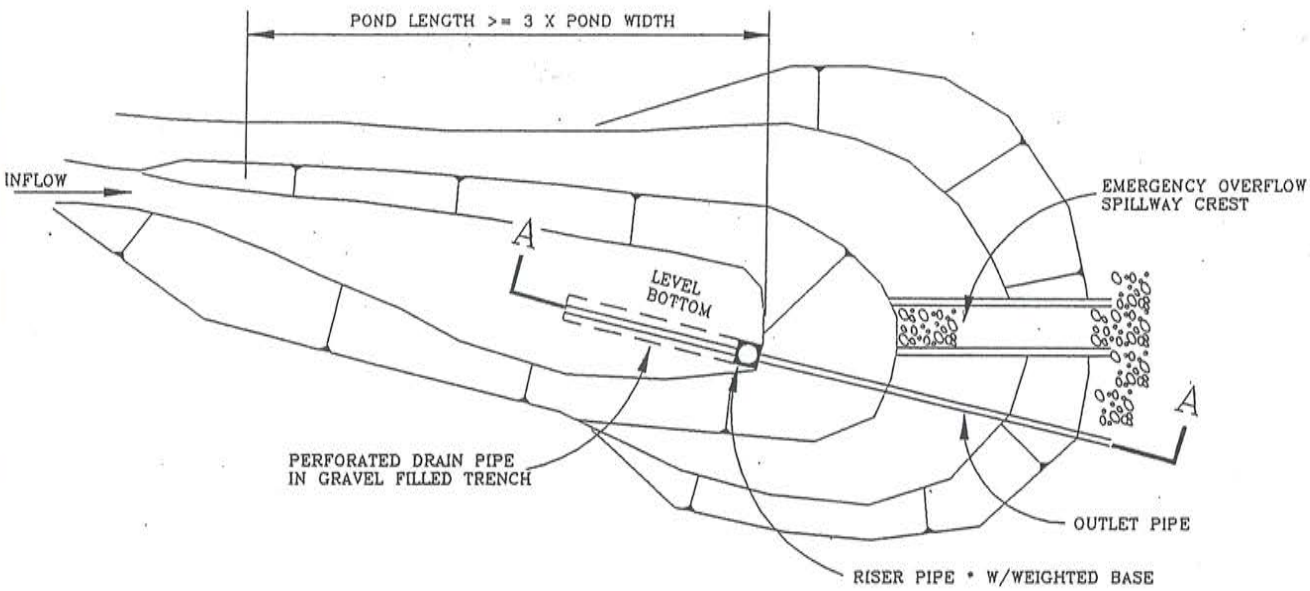


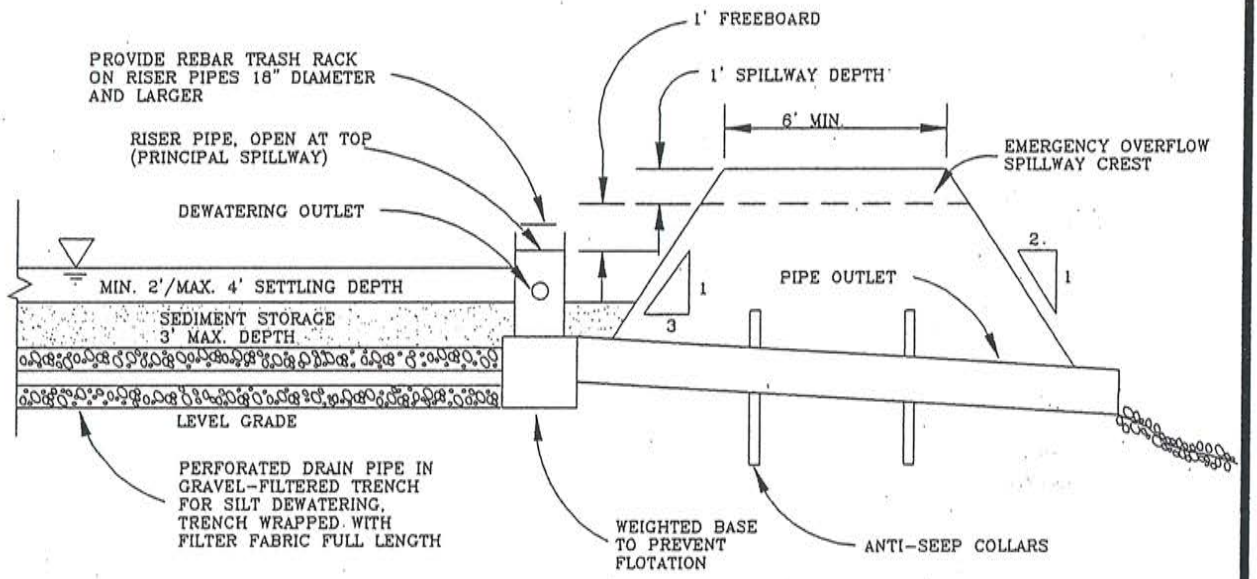


## SECTION A-A

GENERAL NOTES

1. SEDIMENT DEWATERING MAY BE ACCOMPLISHED WITH PERFORATED DRAIN PIPE IN TRENCH AS SHOWN OR WITH A PERFORATED RISER COVERED WITH FILTER FABRIC AND GRAVEL "CONE".
2. A FILTER FABRIC FENCE OR SIMILIAR FILTER MUST BE CONSTRUCTED TO FILTER RUNOFF FROM THE POND PRIOR TO DISCHARGE FROM THE CONSTRUCTION SITE.

CITY OF TROUTDALE

*SEDIMENT POND*

| DATE: | DRAWING NO. |
|---|---|
| UPDATED 1997 | X - 11 |

FILENAME: APWA0510.DWG

S-147

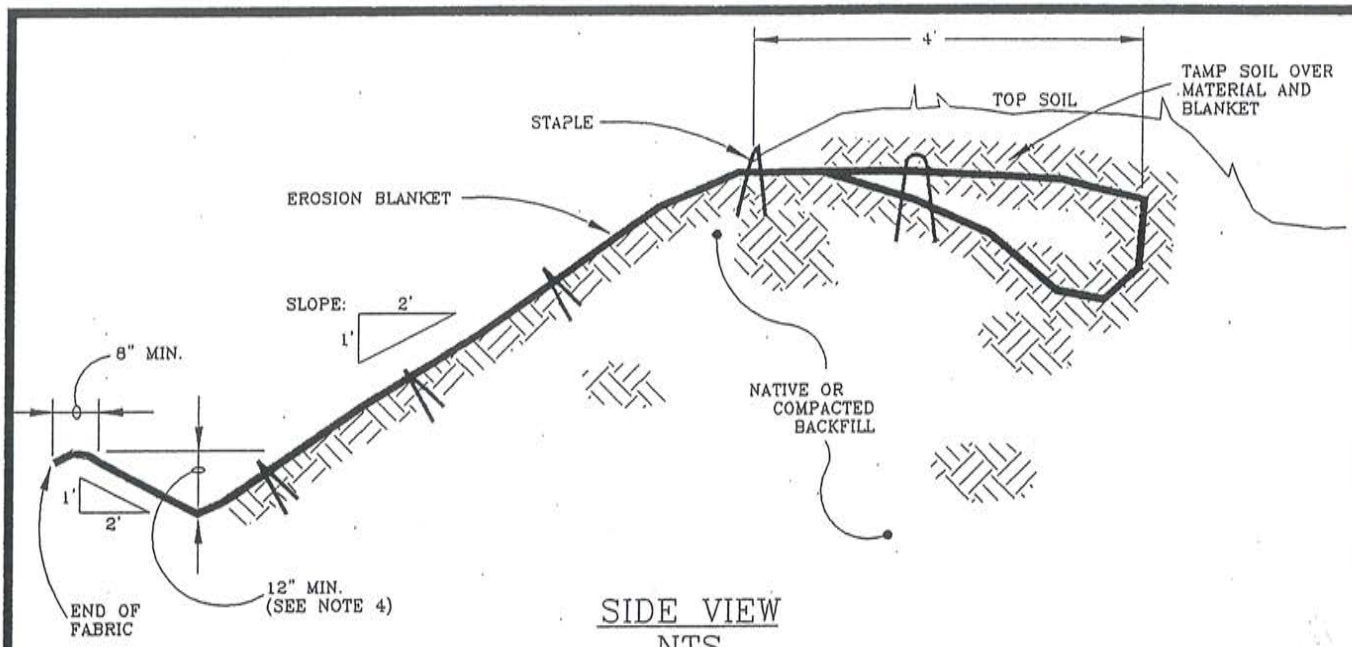


SIDE VIEW
NTS

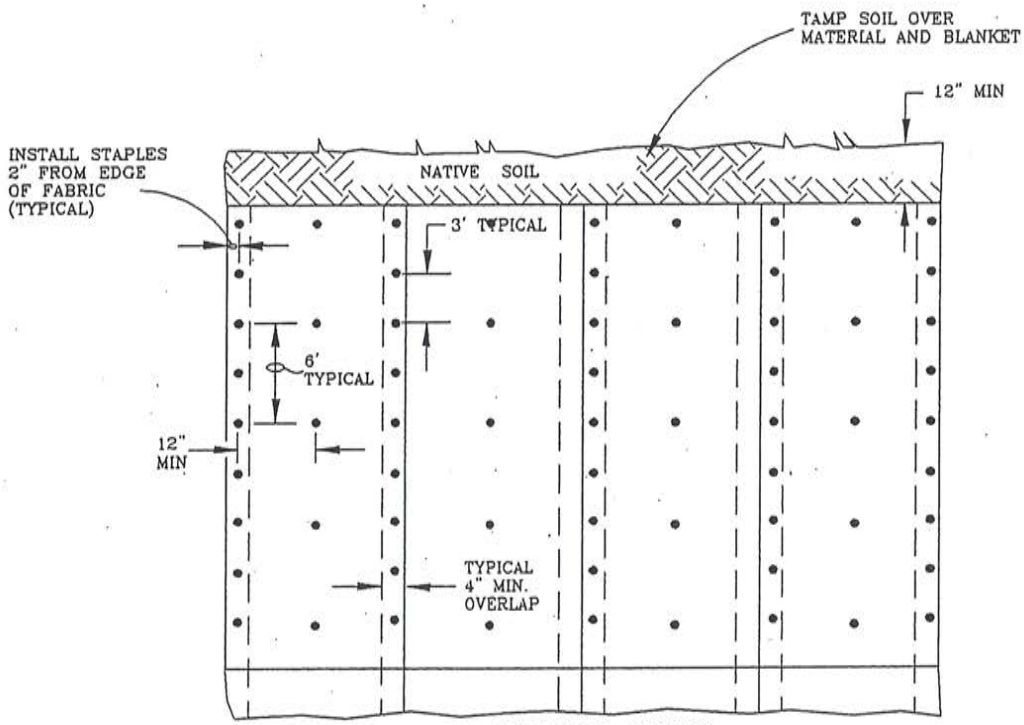


FRONT VIEW
NTS

GENERAL NOTES:

1. SLOPE SURFACE SHALL BE FREE OF ROCKS, CLODS, STICKS AND GRASS. MATS/BLANKETS SHALL HAVE GOOD SOIL CONTACT.
2. LAY BLANKETS LOOSELY AND STAKE OR STAPLE TO MAINTAIN DIRECT CONTACT WITH THE SOIL. DO NOT STRETCH.
3. BLANKETS MUST BE STAPLED USING STAPLES A MINIMUM OF 6" IN LENGTH AND SPACED AS SPECIFIED IN THE FRONT VIEW. 12" LONG STAPLES MAY BE REQUIRED DEPENDING ON SOIL CONDITIONS.
4. THIS 12" DEPTH IS A MINIMUM REQUIREMENT. DEPTH MAY BE INCREASED AS DEEMED NECESSARY BY CITY FORCES ON A PER PROJECT BASIS.

CITY OF TROUTDALE

*EROSION BLANKET INSTALLATION DETAIL*

| DATE: | DRAWING NO. |
|---|---|
| UPDATED 1997 | X - 12 |

FILENAME: APWA0139.DWG

S-148

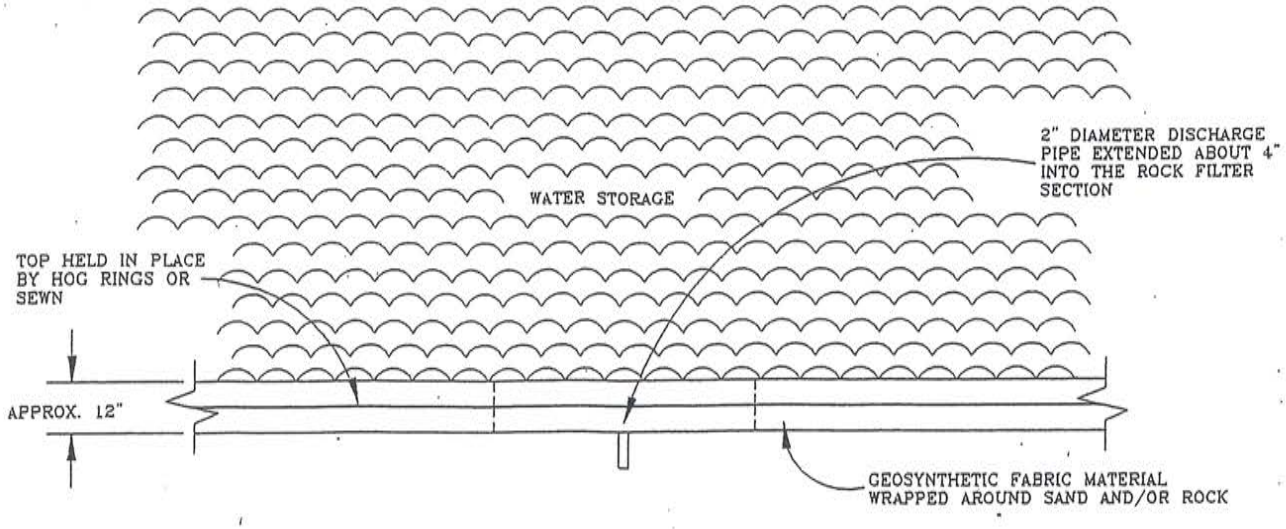


TOP VIEW

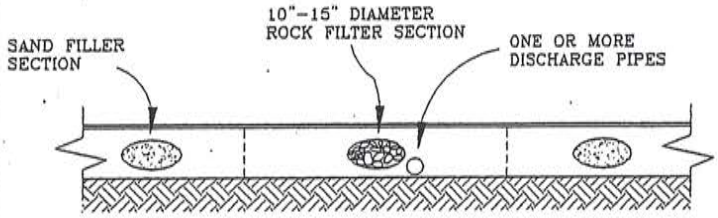


FRONT VIEW

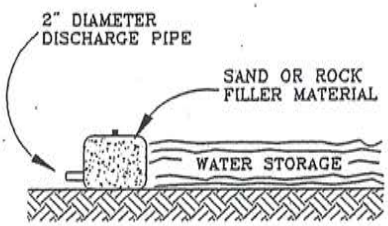


SIDE VIEW

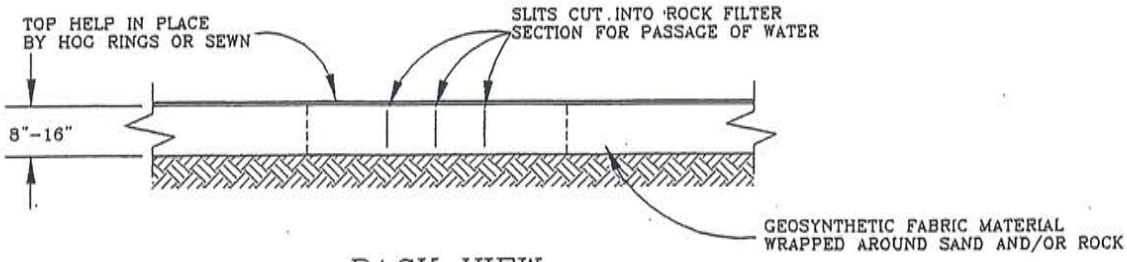


BACK VIEW

GENERAL NOTES

1. IF THE CONTINUOUS BERM IS USED AS AN ALTERNATIVE TO A SEDIMENT FENCE THEN IT MUST BE FILLED WITH MATERIAL WHICH ALLOWS WATER TO PASS THROUGH SUCH AS PEA GRAVEL OR 3/4" - 1" ROCK.
2. IF THE CONTINUOUS BERM IS USED AS AN ALTERNATIVE TO A SEDIMENT TRAP THE MAJORITY OF THE BERM MUST BE FILLED WITH NATIVE SOIL OR SAND. THE LOW POINT AREA MUST BE FILLED WITH MATERIAL WHICH ALLOWS WATER TO PASS THROUGH SUCH AS PEA GRAVEL OR 3/4" - 1" ROCK. A MINIMUM 3' WIDE ROCK FILTER SECTION MUST BE LOCATED AT THE LOW POINT TO WHICH WATER WILL FLOW THROUGH.
3. WHEN INSTALLING THE CONTINUOUS BERM EACH END MUST BE ANGLED INWARD TO PREVENT SEDIMENT AND WATER FROM FLOWING AROUND THE BERM.

CITY OF TROUTDALE

*CONTINUOUS GEOSYNTHETIC BERMS*

| DATE: | DRAWING NO. |
|---|---|
| UPDATED 1997 | X - 13 |

FILENAME. APWA0512.DWG

# GARBAGE AND RECYCLING

**(Part XI & XII)**

# GARBAGE AND RECYCLING

## (Part XI)

## * General Requirements

See IC No. 37 - Garbage and Recycling, Part XI, General Requirements, is replaced in its entirety with the following:
All commercial, industrial, and multi-family solid waste and recycling container storage areas and enclosures shall meet the requirements of the Troutdale Development Code, the Troutdale Municipal Code, the City of Portland Source Control Manual, and the Plumbing Code.
Site designers are also encouraged to consult with the City's exclusive franchised solid waste collection service provider in the positioning and orientation of solid waste and recycling enclosures to ensure their serviceability by collection vehicles.

# STANDARDS FOR GARBAGE AND RECYCLING CONTAINER ENCLOSURES

All enclosures used to contain garbage and recycling containers at either multi-family or commercial developments must conform to the following minimum_standards:

1. Screening

   All enclosures for garbage and recycling containers must be screened from public view. Screening materials include:

   a. Cyclone fencing with slats

   b. Wooden fencing

   c. Concrete block enclosure

   Note: Materials other than the above-mentioned will be evaluated for approval on a case by case basis by the Site and Design Review Committee.

2. Gates

   Gates must meet the following requirements:

   a. Must have a latch or some type of device that will keep the gate shut after it is closed. The device can be above or below ground.

   b. b. Must have a mechanism to keep them open during trash removal. The device can be above or below ground.

   c. Wheels are not required; however, the hinge must be adequate to support the weight of the gate.

3. Base Material/Flooring

   The entire base dimension must meet the following requirements

   a. Must be made out of concrete. Concrete shall have a nominal thickness of 8" of 3300 PSI at 28 days. Asphalt or other material is not acceptable.

   b. Must be positively sloped to the drainage system.

# GARBAGE AND RECYCLING

## (Part XII)

## * Construction Details

**2. Garbage and Recycling, Part XII, Construction Details, is deleted in its entirety.**

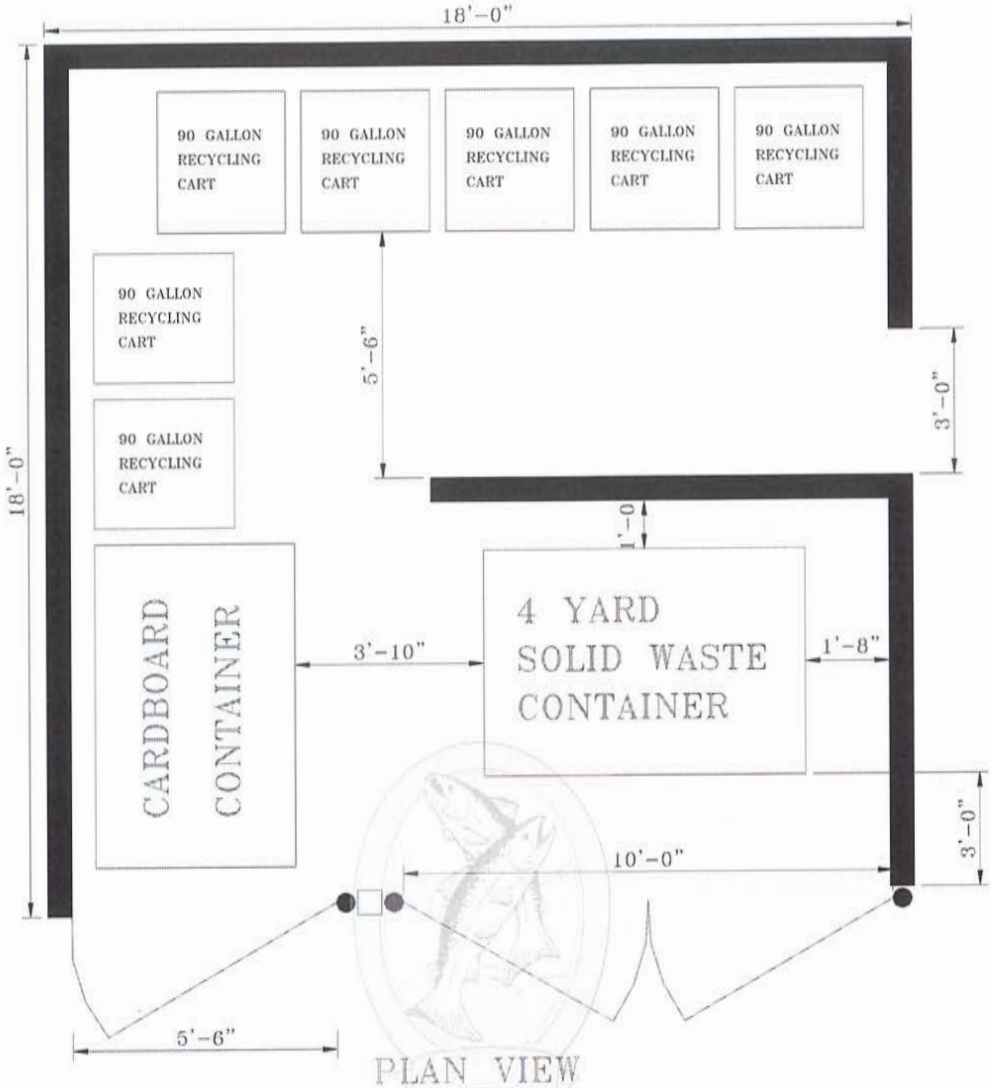


PLAN VIEW

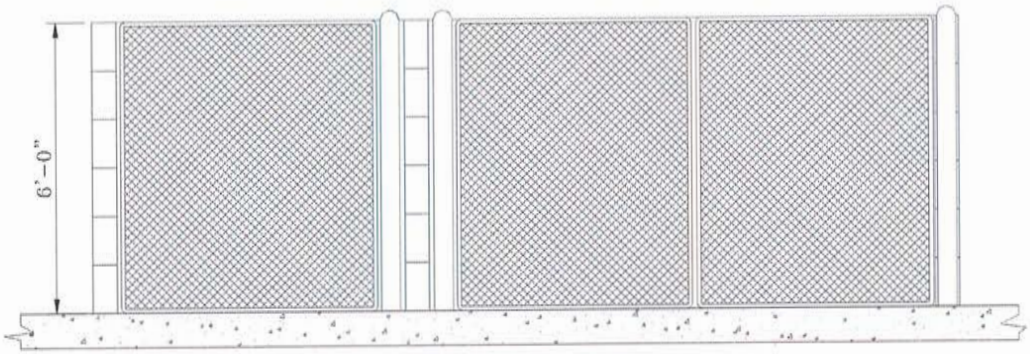


PROFILE VIEW

*GENERAL NOTES*

1. *This can easily be converted to a commercial structure with the addition of a grease container and possibly a 6 yard solid waste container.*
2. *To be sized to fit into two parking spaces.*

CITY OF TROUTDALE

*MULTI-FAMILY SAMPLE 1*

| DATE: | DRAWING NO. |
|---|---|
| UPDATED 1997 | XII - 1 |

FILENAME: WDRS2.DWG

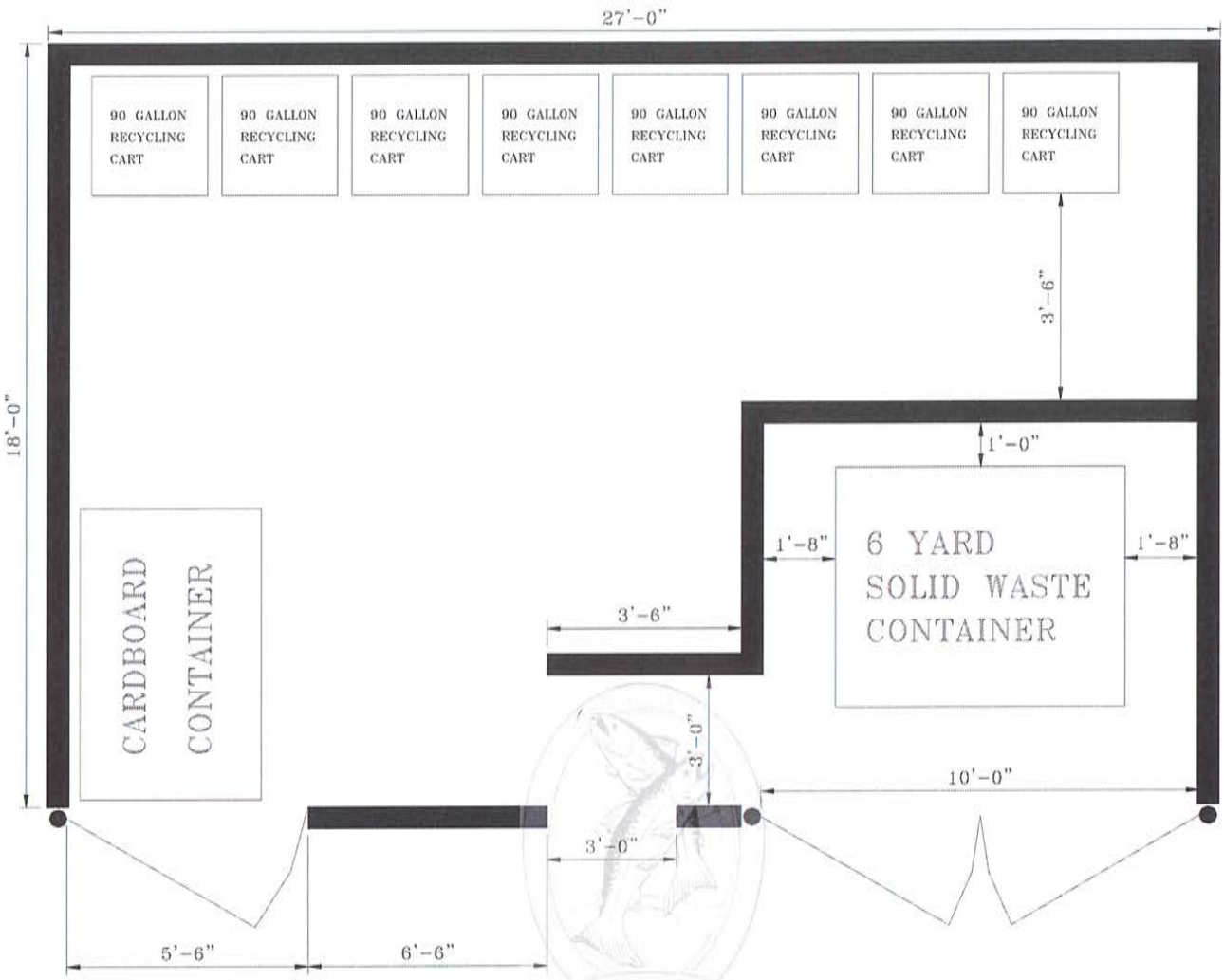


PLAN VIEW

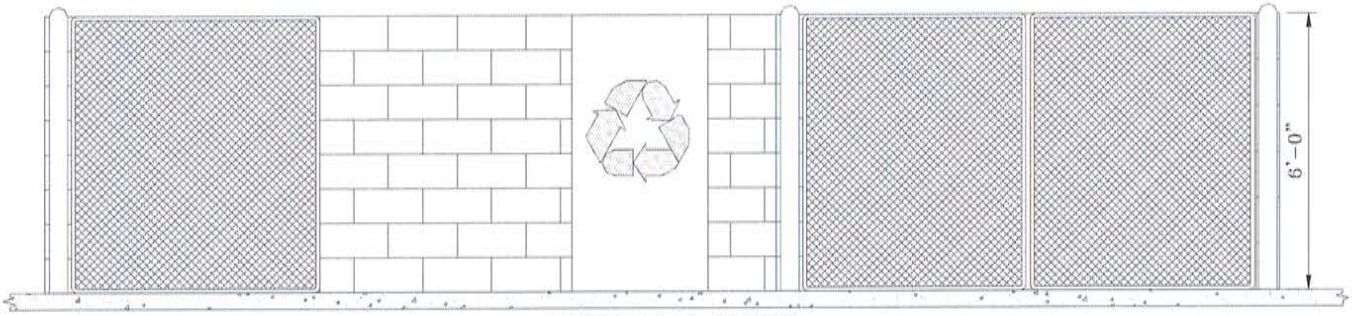


PROFILE VIEW

*GENERAL NOTES*

1. *To be sized to fit exactly into three parking spaces.*
2. *Provides plenty of extra space.*
3. *Could be modified to hold an additional solid waste container.*
4. *This design is intended for use at a large complex.*

CITY OF TROUTDALE

*MULTI-FAMILY SAMPLE 2*

| DATE: | DRAWING NO. |
|---|---|
| UPDATED 1997 | XII - 2 |

FILENAME: WDRS5.DWG

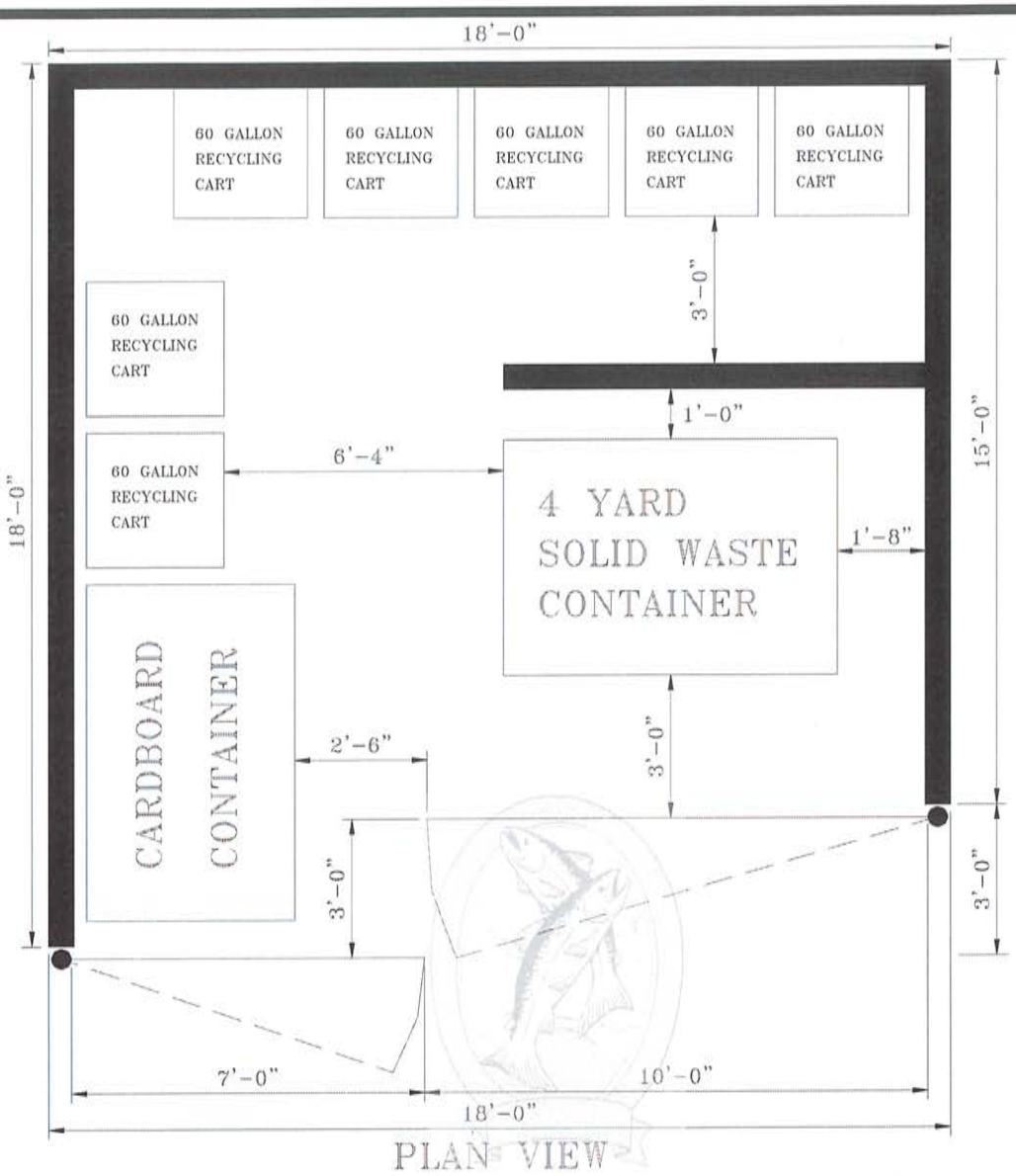


PLAN VIEW

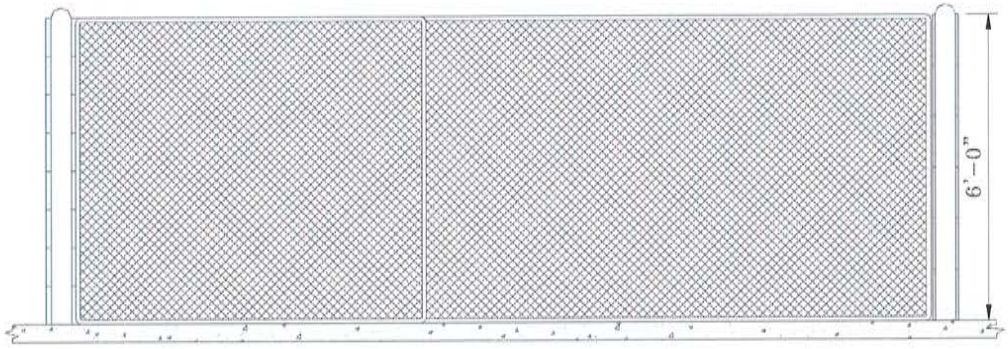


PROFILE VIEW

*GENERAL NOTES*

1. *Plenty of room for recycling carts.*
2. *Easy access.*
3. *Simple design.*
4. *Can not hold larger containers.*
5. *There is limited clearance between the cardboard container and the dumpster gate.*
6. *This is a good design for a small to medium multi-family complex.*

CITY OF TROUTDALE

*MULTI-FAMILY SAMPLE 3*

| DATE: | DRAWING NO. |
|---|---|
| UPDATED 1997 | XII - 3 |

FILENAME: WDRS6.DWG

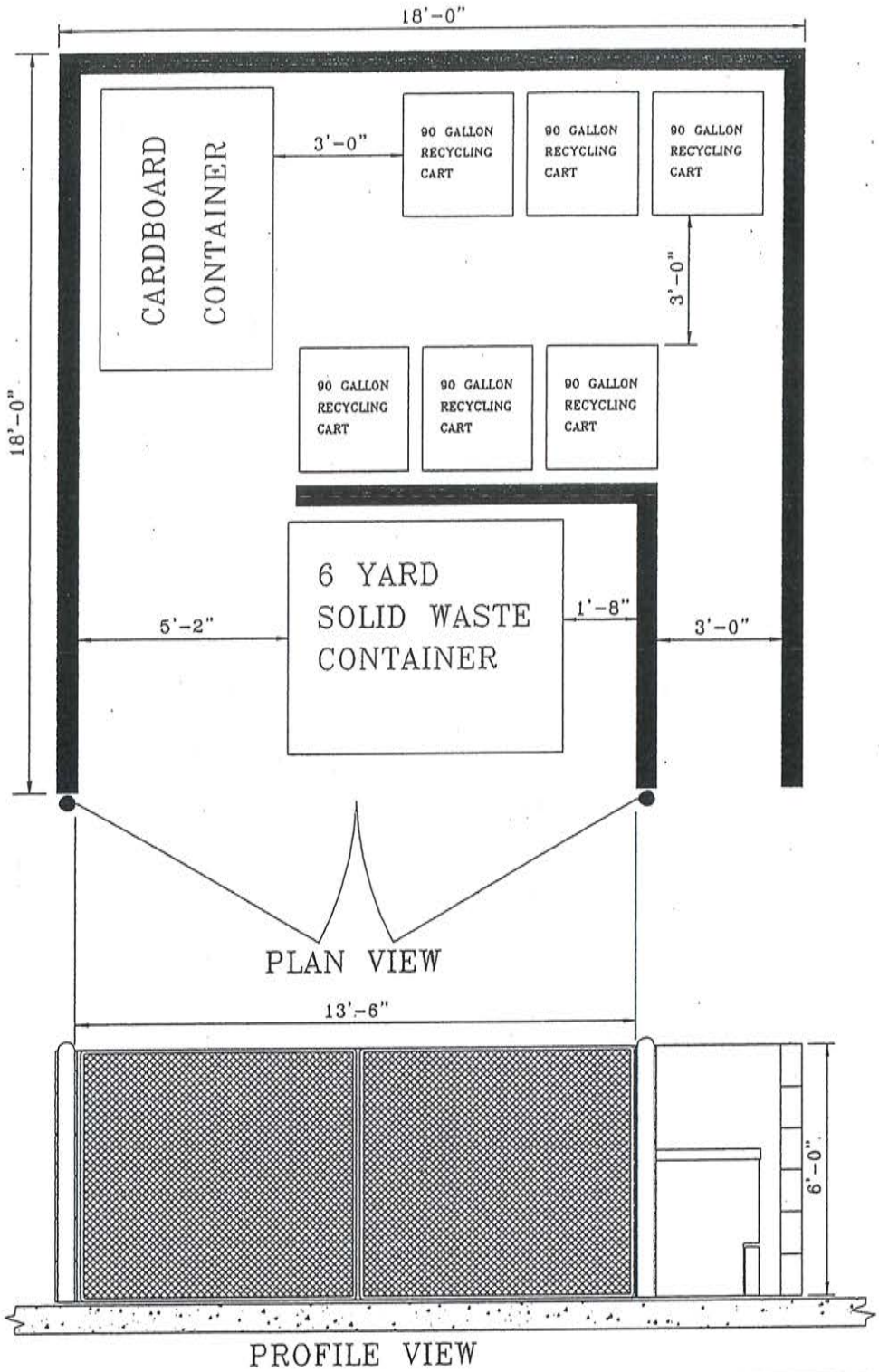


*GENERAL NOTES*

1. *To be sized to fit two parking spaces exactly.*
2. *There is easy access to recycling carts while access to the solid waste container is restricted.*
3. *Holds a large solid waste container.*
4. *Very simple design (easy to construct).*

CITY OF TROUTDALE

*COMMERCIAL SAMPLE 1*

| DATE: | DRAWING NO. |
|---|---|
| UPDATED 1997 | XII - 4 |

FILENAME: WDRS8.DWG

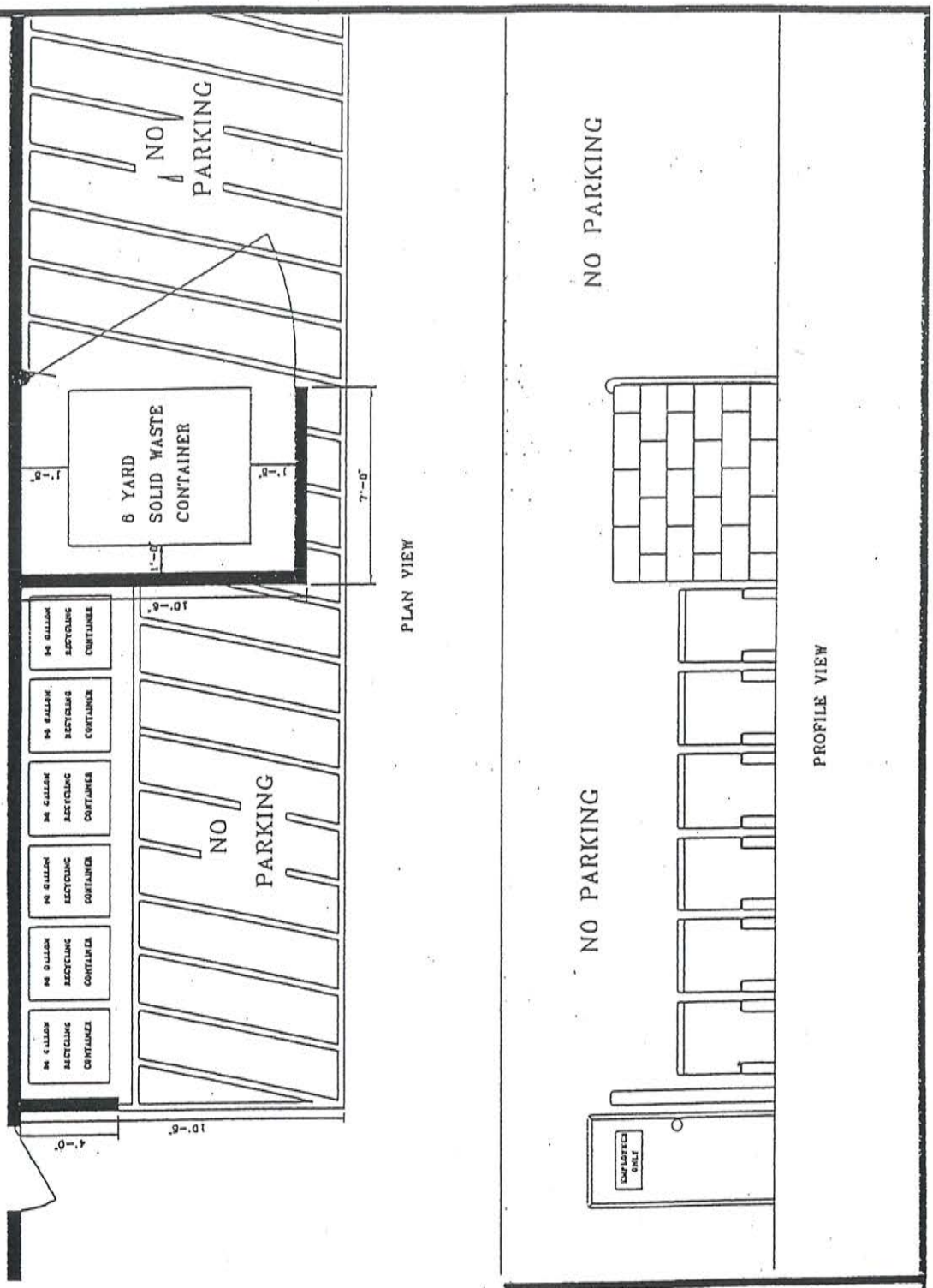


*GENERAL NOTES*

1. *This design requires the area behind the building to be kept clean and clear for truck access.*
2. *Easy for driver to get in and out; takes up relatively little space.*
3. *This design is good for a shopping center.*
4. *Several enclosures could fit along the backside of a large building.*

CITY OF TROUTDALE

*COMMERCIAL SAMPLE 2*

DATE: UPDATED 1997

DRAWING NO. XII — 5

FILENAME: WORS12.DWG

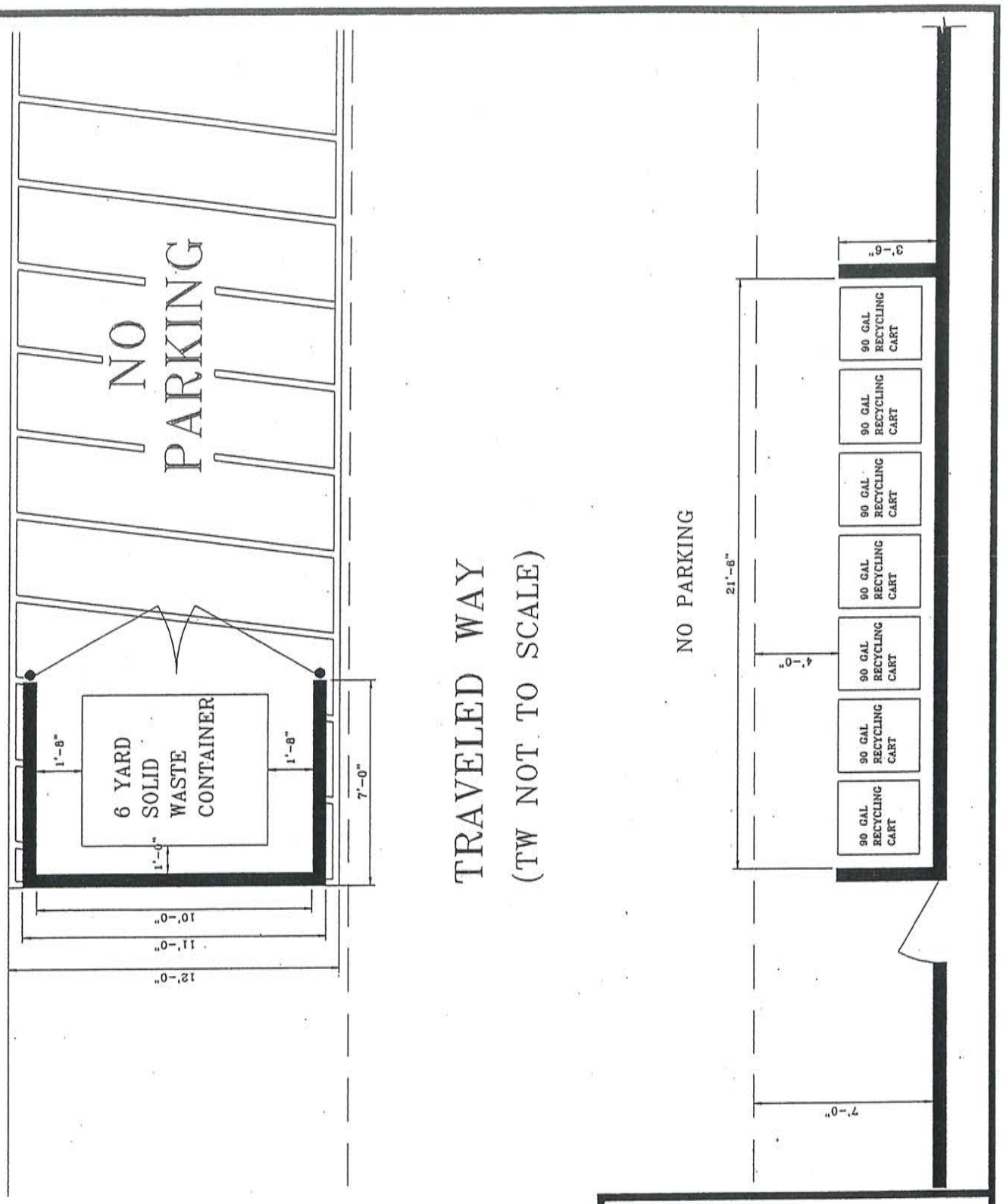


*GENERAL NOTES*

1. *This design utilizes space that is generally unused.*
2. *This design does not require the area behind the building to be kept clear.*
3. *This design works well behind a shopping center.*
4. *Plenty of space for recycling carts.*
5. *Easy for truck to get in and out.*

CITY OF TROUTDALE

*COMMERCIAL SAMPLE 3*

| DATE: | DRAWING NO. |
|---|---|
| UPDATED 1997 | XII - 6 |

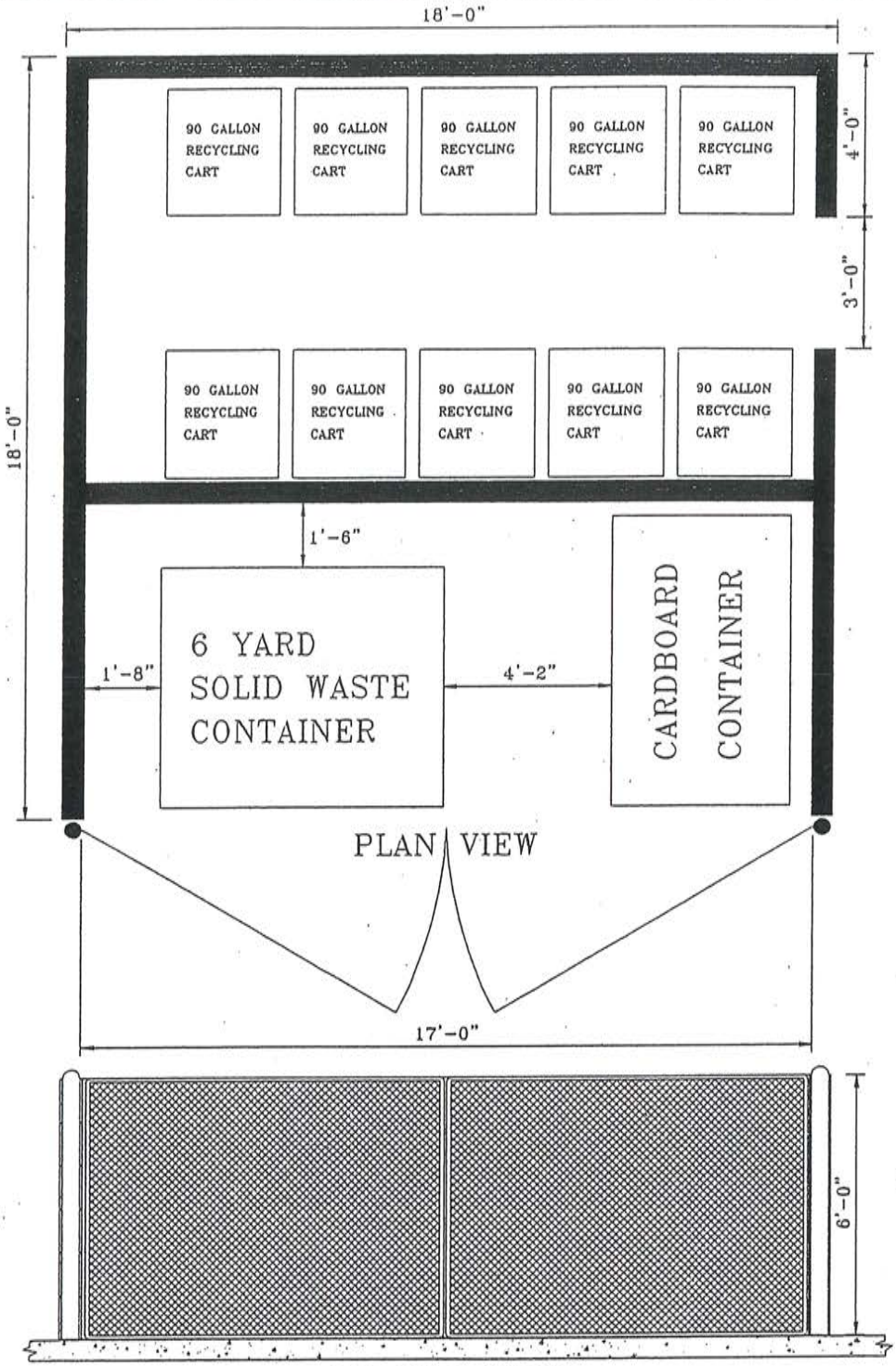


PROFILE VIEW

*GENERAL NOTES*

1. *To be sized to fit exactly into two parking spaces.*
2. *Plenty of room for recycling carts.*
3. *Simple design and easy to construct.*
4. *Easy access to recycling carts.*
5. *Can easily add a grease container.*
6. *Could eliminate middle row of recycling carts and middle wall making this enclosure suitable for a multi-family complex.*
7. *Holds a large solid waste container.*

CITY OF TROUTDALE

*COMMERCIAL SAMPLE 4*

| DATE: | DRAWING NO. |
|---|---|
| UPDATED 1997 | XII - 7 |

FILENAME: WDRS7.DWG

Removed (duplicate)

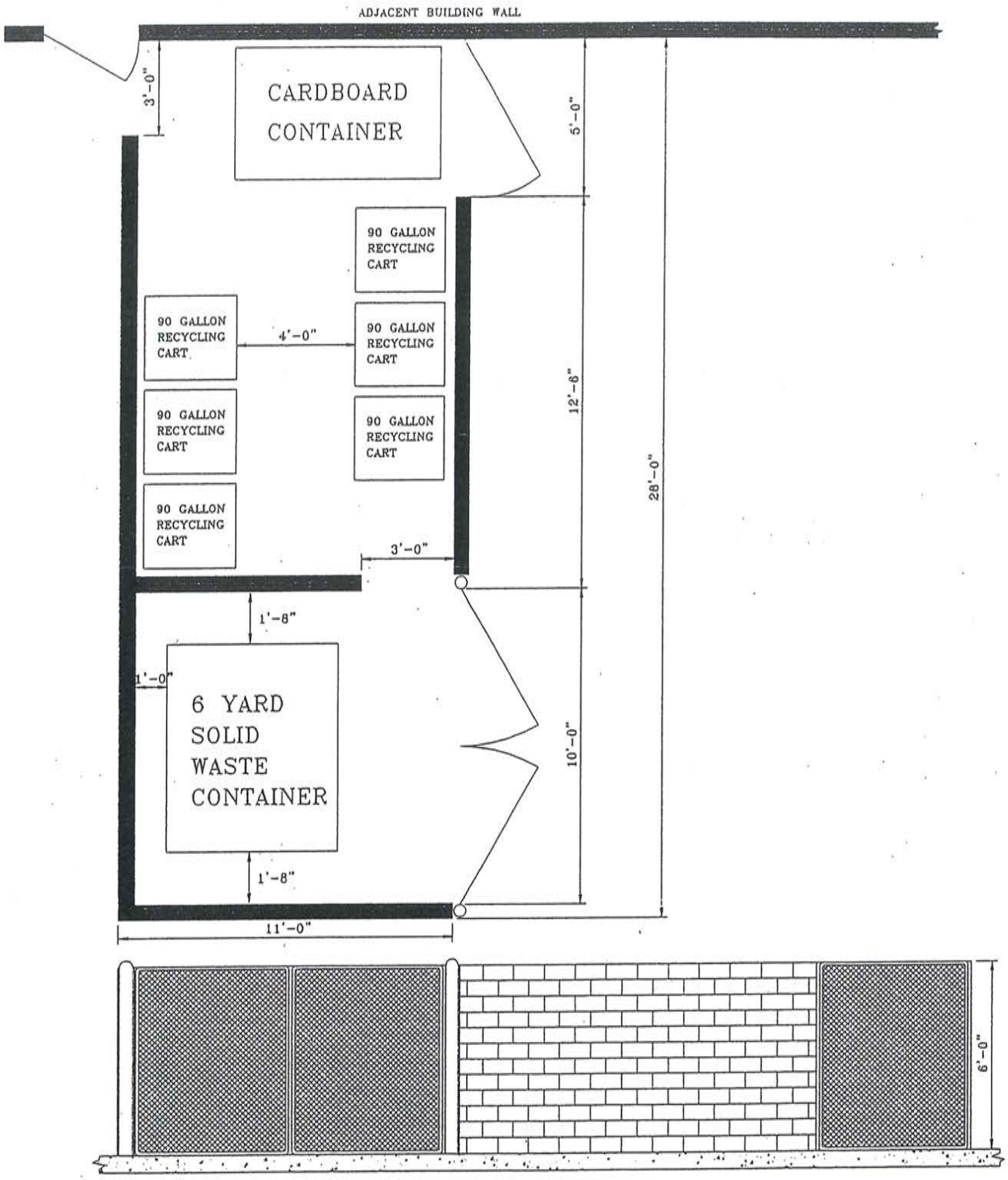


*GENERAL NOTES*

1. *Could add a grease container, but would lose some recycling carts.*
2. *Could move the dumpster forward and place the grease container behind it (would require key access to the dumpster).*
3. *Good clear spaces; easy access.*
4. *Intended for small businesses especially restaurants.*

CITY OF TROUTDALE

*COMMERCIAL SAMPLE 5*

| DATE: | DRAWING NO.: |
|---|---|
| UPDATED 1997 | XII - 8 |

FILENAME: WDRS9.DWG

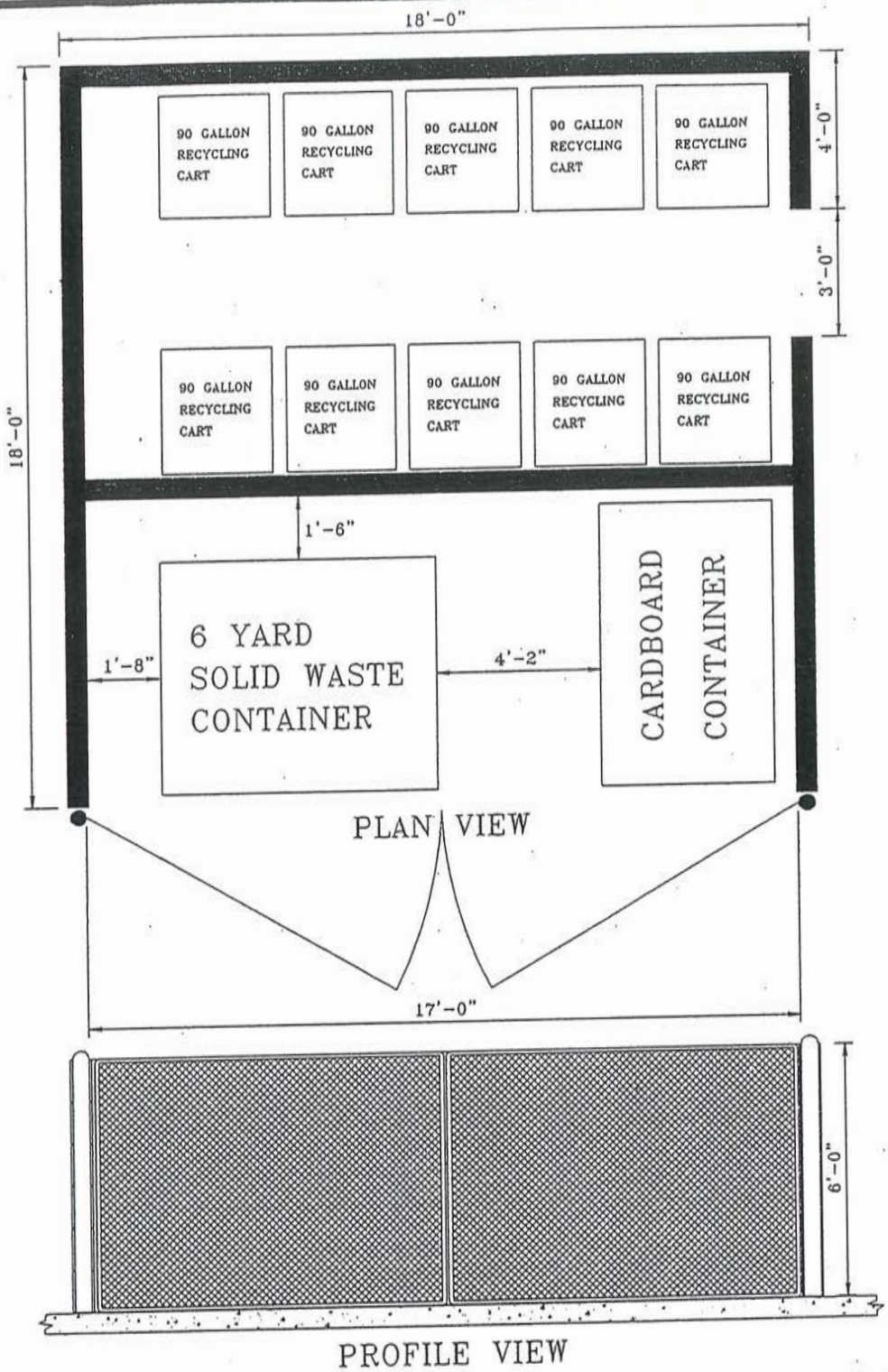


*GENERAL NOTES*

1. *To be sized to fit exactly into two parking spaces.*
2. *Plenty of room for recycling carts.*
3. *Simple design and easy to construct.*
4. *Easy access to recycling carts.*
5. *Can easily add a grease container.*
6. *Could eliminate middle row of recycling carts and middle wall making this enclosure suitable for a multi-family complex.*
7. *Holds a large solid waste container.*

CITY OF TROUTDALE

*COMMERCIAL SAMPLE 6*

| DATE: | DRAWING NO. |
|---|---|
| UPDATED 1997 | XII - 9 |

FILENAME: WDRS7.DWG